ENVIRONMENTAL ASSESSMENT

Installation Fencing, Fort Wainwright, Alaska

Table of Contents

Notice of Availability 2

Finding of No Significant Impact 3

1.0. Purpose and Need for the Proposed Action 9
1.1 Introduction 9
1.2 Purpose and Need 9
1.3 Objectives 9
1.4 Scope of Environmental Analysis and Decision to Be Made 10
1.5 Interagency Coordination 11
1.6 Issues of Concern 11
2.0 Description of Proposed Action and Alternatives 13
2.1 Location and General Description of the Area 13
2.2 Description of Proposed Action 14
2.3 Description of Reasonable Alternatives 17
2.3.1 Alternative 1: No Action 17
2.3.2 Alternative 2: Main Post Fencing 20
2.3.3 Alternative 3: Main Post Fencing, Excluding Golf Course 22
2.3.4 Alternative 4: High Security Fencing 24
2.3.5 Mitigation 26
2.4 Alternatives Considered and Eliminated from Detailed Study 28
2.4.1 Entire Main Post Boundary 28
2.4.2 Tie into the Current DOT Fence 28
2.4.3 North of River Road 28
2.4.4 Increasing Sentry Patrols and Enforcement 28
2.5 Summary of Environmental Consequences 29
3.0 Description of the Affected Environment and Environmental Impacts (Direct and Indirect) from the Proposed Action and Alternatives 30
3.1 Air Quality 31
3.2 Soils 33
3.3 Vegetation 35
3.4 Water Resources 36
3.5 Floodplains 37
3.6 Wetlands 38
3.7 Fisheries 39
3.8 Wildlife 41
3.9 Public Access and Recreation 43
3.10 Infrastructure 45
3.11 Fire Management 45
3.12 Cultural Resources 47
3.13 Environmental Justice 48
3.14 Socioeconomics 50
3.15 Aesthetics 52

3.16 Cumulative Impacts from the Proposed Action and Alternatives 53
3.16.1 Present and Future Actions 53
3.16.2 Air Quality 53
3.16.3 Vegetation 53
3.16.4 Fisheries and Wetlands 54
3.16.5 Wildlife 54
3.16.6 Public Access and Recreation 54
3.16.7 Cultural Resources 54

4.0 List of Preparers and Contributors 55

5.0 References 57

6.0 List of Agencies and Individuals Contacted 59

Appendix A: Record of Non-Applicability 61
Appendix B: Timber Policy 62
Appendix C: Government Agency Correspondence 63

List of Tables

Table 1. Description of Proposed Perimeter Fence, Alternative 1 18
Table 2. Description of Proposed Perimeter Fence, Alternative 2 20
Table 3. Description of Proposed Perimeter, Alternative 3 22
Table 4. Description of Proposed Perimeter Fence, Alternative 4 24
Table 5. Summary of Environmental Consequences for the Proposed Alternatives and Identification of Relevant Issues 29
Table 6. Thresholds[1] of Impacts in Relation to Issue and Region of Influence 30
Table 7. Summary of Emissions Associated with Construction Equipment Operation 32
Table 8. Fairbanks Region Income and Poverty Statistics for 2000 50
Table 9. Fairbanks Region Average Monthly Employment and Earnings Statistics 51
Table 10. Socioeconomic Impacts of Fort Wainwright for Year 2000 51

List of Figures

Figure 1. Location of Fort Wainwright, Alaska, and the Cantonment Area 14
Figure 2. Pipe-Rail Design 15
Figure 3. Chain-Link Design 15
Figure 4. Combined Security Fencing Design 16
Figure 5. Alternative 1: No Action 19
Figure 6. Alternative 2: Main Post Fencing 21
Figure 7. Alternative 3: Enhanced Main Post Fencing 23
Figure 8. Alternative 4: High Security Fencing 25

List of Common Abbreviations

ADEC	Alaska Department of Environmental Conservation
AQCR	Air Quality Control Region
CEQ	Council on Environmental Quality
CERCLA	Comprehensive Environmental Response, Compensation and Liability Act of 1980, also known as *Superfund* (PL 96-510 et seq.)
DOD	Department of Defense
DOTPF	State of Alaska, Department of Transportation and Public Facilities
DPW	Directorate of Public Works
DERA	Defense Environmental Restoration Act. The DOD equivalent to CERCLA (see above)
DRMO	Defense Reutilization Marketing Office
EA	Environmental Assessment
EIS	Environmental Impact Statement
EPA	Environmental Protection Agency
FWA	Fort Wainwright, Alaska
mg/l	Milligram per liter
RCRA	Resource Conservation and Recovery Act
Superfund	See CERCLA above
USAG-AK	United States Army Garrison, Alaska
USFWS	United States Fish and Wildlife Service

1.0 PURPOSE AND NEED FOR THE PROPOSED ACTION

1.1 Introduction

The United States Army Garrison, Alaska (USAG-AK) is proposing to install fencing along and near portions of the Fort Wainwright Main Post boundary. This proposed project involves improving the security of the most at-risk parts of the installation by installing and upgrading fencing around significant portions of these areas. Areas proposed for fencing include the boundary along the Richardson/Steese Highway corridor that borders Fort Wainwright, portions of Badger Road and the south bank of the Chena River, and around the Birchwood housing development located north of the Chena River. New fencing would be installed where no fencing currently exists and to replace existing fencing that has been damaged or is inadequate for security purposes. Where not already present or where present but inadequate, secure gates would be installed at all necessary vehicular access points in the new fencing leading onto and within Fort Wainwright.

1.2 Purpose and Need

Installing fencing along and near portions of the Fort Wainwright Main Post boundary would serve to:

(1) Delineate the Fort Wainwright installation boundary to alert the public that they are intentionally or unintentionally entering military training land. USAG-AK requires that individuals seek authorized access using appropriate procedures for their own safety. Boundary demarcation would reduce the likelihood of safety issues for those seeking recreational opportunities.

(2) Deter both vehicle and pedestrian trespassers. Additionally, the fence would help reduce illegal activities occurring on USAG-AK property such as poaching and illegal dumping. These activities cost soldier time and Army dollars to remediate, and often negatively impact the environment.

(3) Reduce the cantonment area's vulnerability to unauthorized vehicular and pedestrian intrusion and protect resources necessary for National Defense.

(4) Allow soldiers to train to standard safely and efficiently by reducing the number of military guards posted along training area boundaries during a training event. Reducing the number of guards would optimize training events by allowing more troops to participate.

If fencing is not provided, the Command would be unable to effectively provide the necessary increased level of training and safety for soldiers, define boundary delineation of the training areas for public safety, or reduce trespassing and illegal activities. If the fencing project is not implemented, the installation will remain vulnerable to unauthorized intrusion (either intentional or unintentional) and associated public safety risks.

1.3 Objectives

Objectives for the proposed action include the following:

- Demarcate boundary of the training area for public safety.
- Deter both pedestrian and vehicle trespassing and associated illegal activity.
- Protect cantonment area resources necessary for National Defense.
- Train soldiers to standard safely and efficiently.

These objectives are required to be met under the guidance of the Fort Wainwright Physical Security Plan, which is part of the larger, overall Department of the Army Anti-Terrorism and Force Protection Program. These objectives are the minimum standards that the proposed action must meet, and will help USAG-AK define the range of reasonable alternatives to be analyzed in this environmental assessment (EA).

1.4 Scope of Environmental Analysis and Decision to Be Made

This EA considers direct, indirect, and cumulative effects of the proposed action and alternatives, including the No Action Alternative. It was prepared in accordance with the National Environmental Policy Act (NEPA) of 1969 [42 USC 4321 *et seq*.], Council on Environmental Quality (CEQ) Regulations 40 CFR Parts 1500-1508, and Army Regulations 32 CFR Part 651 *(Environmental Analysis of Army Actions)*. A specific requirement for this EA is an appraisal of impacts of the proposed fencing project, including a determination of whether or not a Finding of No Significant Impact (FNSI) is appropriate or whether a Notice of Intent to prepare an environmental impact statement (EIS) is required.

The proposed installation of fencing along and near portions of the Fort Wainwright Main Post boundary is the focus of this EA. The scope of this EA includes a discussion of potential impacts to those resources identified during the scoping period. Resource categories analyzed for the proposed action and alternatives include:

- Air Quality
- Soils and Vegetation
- Water Resources and Wetlands
- Fisheries
- Wildlife
- Public Access and Recreation
- Infrastructure
- Fire Management
- Cultural Resources
- Environmental Justice
- Socioeconomics
- Aesthetics

This EA will provide the decision-maker, the Commander, USAG-AK, with the information necessary to evaluate the environmental and cultural impacts associated with the proposed action and its alternatives. The selection of the preferred alternative will take into account technical, economic, environmental and social issues, and the ability to meet the proposed action objectives. The following range of alternatives has been evaluated for presentation to the decision-maker:

- Alternative 1 No Action: Existing Fencing
- Alternative 2: Main Post Fencing
- Alternative 3: Main Post Fencing, Excluding Golf Course
- Alternative 4: High Security Fencing

This fencing project is included as a future potential project in the Fort Wainwright Physical Security Plan. All physical security measures including anti-terrorism and force protection are

included in that plan. An economic analysis has also been prepared and was utilized in evaluating this project. This project is the most cost effective method to satisfy security and anti-terrorism requirements.

1.5 Interagency Coordination

Several state, federal, and tribal organizations were notified of USAG-AK's intent to install boundary fencing at Fort Wainwright. Governmental agencies listed below were contacted for identification of potential impacts of the proposed action:

- Alaska Department of Environmental Conservation
- Alaska Railroad Corporation
- Office of Habitat Management/Alaska Department of Natural Resources
- Alaska Department of Fish and Game
- Fairbanks North Star Borough
- City of Fairbanks/Mayor Steve Thompson
- Alaska Department of Transportation
- Bureau of Land Management/Northern District Office and Alaska Fire Service

All interagency comments received have been compiled and are part of this document's Planning Record. Comments were considered during the analysis of the proposed action, and are further described in Section 1.6.

1.6 Issues of Concern

Verbal and written comments received from various agencies were used to help determine specific issues of concern. Potential issues were determined to be significant to the analysis of the proposed action if they fell within the scope of the proposed action, if they suggested different actions or mitigation, or if they otherwise influenced the decision on the proposed action. Solutions responsive to many of the concerns and questions were integrated into elements of the alternatives developed for consideration in this EA. Based on public and agency comments, USAG-AK focused analysis in this EA on the following categories:

- **Contamination:** Potential for discovery of contaminated soils during fence construction.
- **Alaska Railroad Right-of-Way:** Possible conflict regarding placement of proposed fence along River Road, where the Eielson Branch of the railroad crosses the Chena River, and the railroad's plans for realignment near the southern boundary of the Fort Wainwright cantonment area.
- **Access:** Potential changes in access to areas that would be closed during times of increased security levels, specifically the Secluded Acres Subdivision.
- **Moose:** Impediment of the north-south movement of moose across the Richardson Highway; possible increases in vehicle-moose encounters along the Richardson Highway; and possible establishment of a captive moose population within the fence boundary leading to overpopulation and threats to human safety.
- **Stream Bank Habitat:** Possible reduction in size of wildlife corridors and disturbance to riparian areas along the Chena River.

Impact analysis completed for each relevant issue to determine the environmental consequences of the alternatives is discussed in Chapter 3, Description of the Affected Environment and Environmental Consequences of the Proposed Action and Alternatives.

Several mitigation measures were proposed that address the concerns raised by governmental agencies and stakeholders.

2.0 DESCRIPTION OF PROPOSED ACTION AND ALTERNATIVES

USAG-AK is proposing to install fencing along certain portions of the Main Post at Fort Wainwright to provide boundary delineation, deter vehicular and pedestrian trespass and illegal activity, protect resources necessary for National Defense, and to provide soldiers with an increased opportunity to train to standard safely and efficiently. This section defines the proposed action, presents alternatives that were considered in this analysis and alternatives that were eliminated from further consideration, and summarizes the environmental consequences of the alternatives.

The existing Fort Wainwright fencing, which is very limited and scattered along the installation boundary, uses several fence designs, and provides an inadequate degree of boundary demarcation and security. Beginning at the installation's Main Gate on Gaffney Road, fencing is needed along the Chena River eastward to Badger Road, and from Badger Road to and along the Richardson and Steese Highways as it circumvents the Main Post area located south of the Chena River, back to the starting point at Gaffney Road. The proposed fencing layout is based on the location of existing National Defense resources including training areas, and cantonment area infrastructure, their proximity to non-military lands, and their associated vulnerability to unauthorized vehicular and pedestrian access.

Relevant environmental and social issues regarding the placement of the installation fencing include the potential of finding contaminated soil during construction, possible conflicts with the Alaska Railroad's right-of-way, access to the post, accommodation of local wildlife movement, and impacts to stream-bank habitat along the Chena River.

A reasonable alternative for this proposed installation fencing would be one that provides boundary delineation, prevents vehicular trespass and illegal activity, protects resources necessary for National Defense, and increases opportunities for soldiers to effectively and safely train to standard. Four reasonable fencing alternatives were considered: (1) No Action Alternative (Existing Fencing), (2) Main Post Fencing Alternative, (3) Main Post Fencing, Excluding Golf Course Alternative, and (4) High Security Fencing Alternative. Other alternatives were considered but were eliminated from further consideration because they failed to meet the purpose and need of the proposed action, or only represented minor variations of the alternatives selected for analysis (see Section 2.4, Description of Alternatives Considered and Eliminated from Detailed Study).

2.1 Location and General Description of the Area

The Fort Wainwright Military Reservation is located in central Alaska, north of the Alaska Range in the Tanana River Valley (Figure 1). The installation lies approximately 120 miles south of the Arctic Circle near Fairbanks, and encompasses approximately 928,000 acres. Main Post consists of 13,700 acres. Main Post is situated on a flat alluvial plain. It is bordered on the west by the city of Fairbanks and on the other three sides by a combination of open space owned by the state of Alaska, the Fairbanks North Star Borough, and private entities.

Fort Wainwright has a northern continental climate typical of the Alaskan Interior, which is characterized by short summers with moderate temperatures, long and cold winters and low precipitation or humidity. Weather is influenced by the mountain ranges on three sides, usually forming an effective barrier to the flow of warm, moist, maritime air. The surrounding uplands also cause the settling of cold Arctic air into the Tanana Valley lowlands.

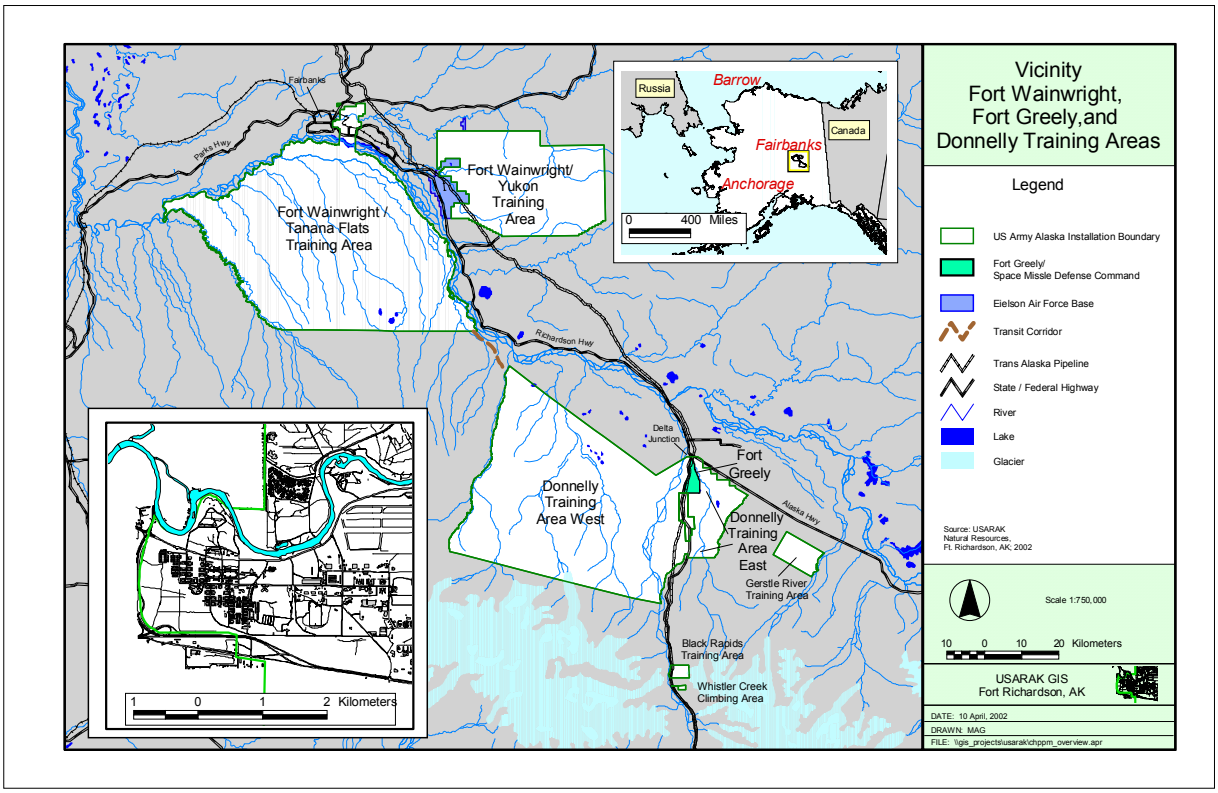

Figure 1. Location of Fort Wainwright, Alaska, and the Cantonment Area.

2.2 Description of Proposed Action

USAG-AK proposes to construct new fencing along portions of the Fort Wainwright Main Post. In addition to the No Action Alternative, three alternatives have been analyzed regarding placement and design of a fence, each consistent with the purpose and need.

Fence Design
Under the proposed alternative, four types of new fencing would be utilized: pipe-rail, chain-link, a combined security design, and stone wall. Existing fencing would remain in place and would be retrofitted and repaired as needed. Additional law enforcement patrols would be needed to meet the purpose and need of the proposed action. In addition, the proposed action would involve the creation of a 30-foot construction and maintenance corridor along the proposed fence route.

<u>Pipe-rail Fencing</u>
The pipe-rail fencing design would consist of two rails (Figure 2). The top rail would have an approximate height of 40 inches, and the bottom rail would be approximately 22 inches from the ground surface. This would create a 12.5-inch gap between the upper and lower rail. The pipe-rail fence would only be used along the southern bank of the Chena River, and would be constructed five feet outside of the high-water mark. The pipe-rail design has the following design specifications:

- Allows for large and small animal crossing (e.g., moose calves and bear cubs underneath the pipe and adults over the top)

- Two horizontal galvanized pipes (round)
- Bottom rail (2½" diameter), top rail (3"), posts (4")
- Rail spacing:
  Between the ground and the bottom rail: 22"
  Between bottom and top rail: 12.5"
- Post spacing is 10 feet on center
- Post pile driven (most posts) or concreted in ground (at corners and gates)

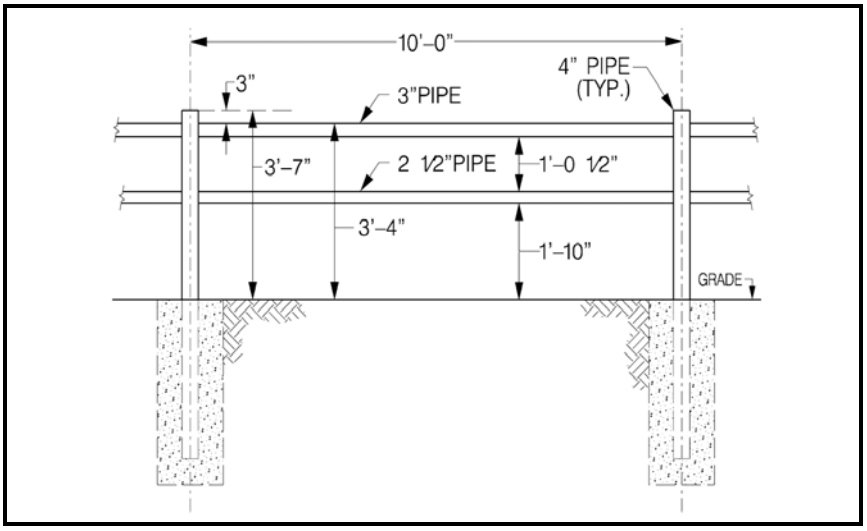

Figure 2. Pipe-Rail Design.

Chain-Link Fencing

The chain-link fencing design consists of an eight-foot-high barrier topped with three strands of barbed wire (Figure 3). The chain-link would be nine-gauge mesh with four-inch center posts placed every ten feet. The barbed wire top guard would extend outward at a 45-degree angle, away from the bounded area.

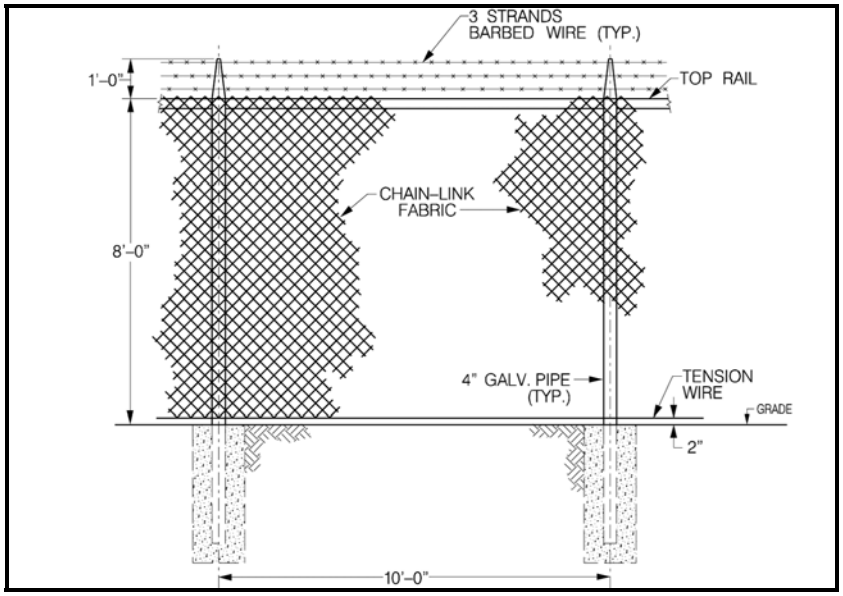

Figure 3. Chain-Link Design.

Combined Security Fencing

The combined security fencing design incorporates the pipe-rail and chain-link designs into one fence. It involves an eight-foot high chain-link fence with three strands of barbed wire at the top, and has two horizontal galvanized pipe-rails placed near the base of the fence (Figure 4). Existing fencing that is inadequate will be replaced.

Three choices are available for installing new combined security fencing, including: (1) retrofit existing fence (remove wire and install chain-link mesh and add pipe-rail); (2) build new fence alongside existing fence; and (3) remove and replace existing fence. The U.S. Army Corps of Engineers will analyze options and will make recommendations based on economic considerations and the Army's security and anti-terrorism/force protection requirements. The combined security fencing has the following design specifications:

Chain-Link Portion

- Chain-link 9 gauge
- Eight foot chain-link mesh with posts on 10 foot centers
- Four inch pipe posts pile driven or in 40" deep x 16" diameter hole with concrete
- Three barbed-wire top guard that extends outward at a 45° angle away from bounded area

Pipe-rail Portion

- Two horizontal galvanized pipe-rails
- Diameter of bottom rail (2 ½"); top rail (3")
- Rail spacing:
  Between the ground and the bottom rail: 22"
  Between bottom and top rail: 12.5"

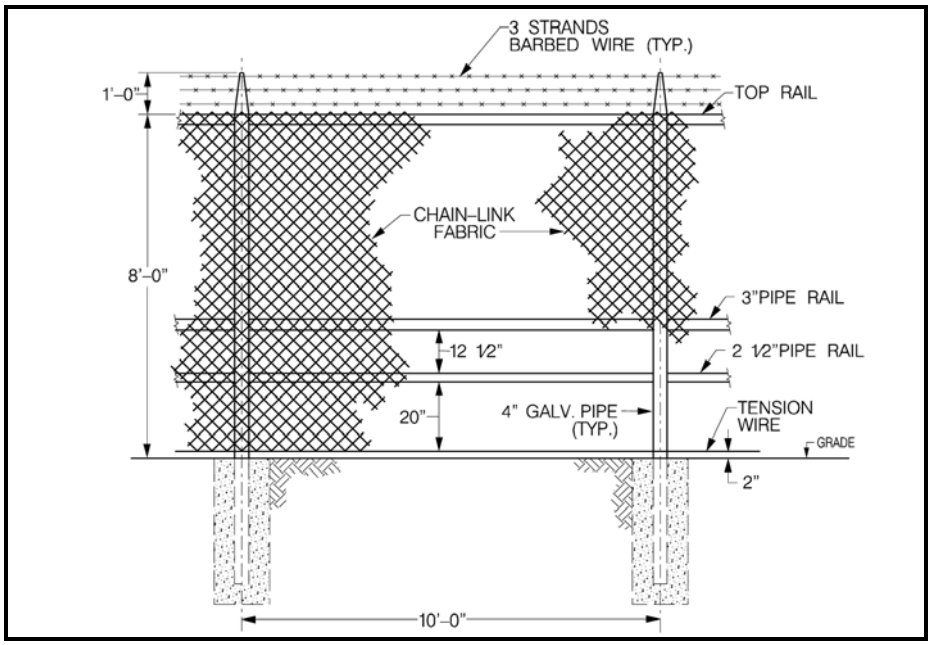

Figure 4. Combination Security Fencing Design.

Fence Construction
A cleared construction and maintenance corridor, 30 feet in width, would be built along the proposed installation fencing route. Construction in upland areas would be carried out year-round. Fencing along wetlands and waterways would be constructed during winter when the ground is frozen. Frozen ground and water bodies would support construction equipment needed to install the fence, which would prevent rutting and vegetation degradation.

Equipment would include powered vehicles that would be driven along the fence during initial construction. A rubber tire-mounted hydro-axe and a feller buncher would be needed to cut and remove the trees in the construction and maintenance corridor. Several pick-ups trucks and larger vehicles would be needed to haul supplies and equipment and to transport workers.

Most fence line posts would be pile-driven to a depth of 40 inches. However, concrete footings would be utilized at gates, bracing panels, and corner panels to provide added support. If cement footings were used, then a wetland permit would be required. If all postholes were pounded, then a wetland permit would not be required.

Due to funding limitations, all of the proposed fencing may not be constructed at one time. Given the priority of security needs, the fact that only portions of the fencing may be funded, or that construction may be completed segment-by-segment rather than all at one time, would not diminish the importance and value of the fencing.

Access
Under the proposed action, USAG-AK would relocate pedestrian and bicycle trails entering and exiting the security gates. Pedestrian and bicycle access would be maintained at Montgomery and Badger Road intersection and at the Main Gate (Gaffney Road).

The proposed action would require additional law enforcement patrols. Possible personnel used for patrols could include military police, conservation law enforcement officers, or range inspectors. Finally "No trespass" warning signs would be posted along the fence and would reference USAG-AK's Access Policy and the USARTRAK check-in system (discussed in section 3.9.1).

2.3 Description of Reasonable Alternatives

The placement of the installation fencing has a no action alternative (Figure 5), and three possible action alternatives (Figures 6, 7, 8). All of the action alternatives use the Richardson/Steese Highway corridor as the southern boundary and the southern bank of the Chena River as the northern boundary. The portions of the fence located along the installation boundary would abut the property line. Those fence portions near the Chena River would be located approximately five feet outside of the mean high-water mark on the river's southern bank.

2.3.1 Alternative 1: No Action

This alternative proposes no action be taken towards development of the fencing project. The National Environmental Policy Act requires the consideration of the No Action Alternative. This action represents the status quo and it provides a basis for comparison of the action alternatives including the proposed action. It also addresses concerns by avoiding or minimizing effects associated with the proposed action. This alternative will be considered and discussed in Chapter 3 of this document.

Fort Wainwright has continuously provided authorized recreational users access to the post through the Main Gate, Trainor Gate or Badger Road Gate. For years the post has been illegally accessed from adjoining streets or housing developments. This creates unsafe conditions for the trespasser and Army personnel that are engaged in training. Under the No Action Alternative, recreational users would be required to follow installation access regulations, which includes USARTRAK.

Currently, fencing at Fort Wainwright is minimal, and approximately 3.2 miles exist on the Main Post (Table 1, Figure 5). Along Badger Road, a fence encloses the Defense Reutilization Marketing Office (DRMO). The Alaska Department of Transportation also has established a fence along the Richardson Highway at the Badger Road overpass. This five-foot chain link fence is 0.6 mile long from the Badger Road overpass westward to near the Weigh Station ponds. A five-foot chain link fence follows, along the west side of the Main Post, from the interchange of the Richardson Highway and Mitchell Expressway. A similar fence is situated on the Fairbanks (west) side of the Highway. This fence has no gates and no gaps. An eight-foot chain link fence has been established around the Birchwood housing area on the west side of the post. This fence runs from Birchwood south and west to the Chena River. An eight foot security fence with barbed wire forms an enclosure, adjacent to SIKU Basin, to the north of the formerly used Trainor Gate. In addition, an enclosure of security fencing has been constructed near the west end of Lazelle in the northwest portion of Fort Wainwright. Short sections of concrete or rock barriers have been established at the Main Gate, Trainor Gate, Badger Road Gate, and the formerly used south gate off of the Richardson Highway.

Mitigation: No mitigation measures are proposed for Alternative 1.

Table 1. Description and Length of Current Perimeter Fencing at Fort Wainwright Main Post.

Section	Location Description	Type of Fence	Length (miles)
Badger Road	Enclosure at south end of Badger Road	Chain link	0.2
Richardson Highway (south)	From Badger Road intersection with Richardson Highway to Weigh Station ponds.	Chain link	1.1
Richardson Highway (west)	From interchange of Steese Expressway with Richardson Highway and Mitchell Expressway to Gaffney Road	Chain link	0.5
Main Gate	Main Gate Area from Gaffney/Airport Roads to Chena River	Gate and Stone Fence	0.3
Chena River	No fence exists	None	0.0
Birchwood Housing	From Chena River to Trainor Gate to River Road	Chain link	1.1
Total			**3.2**

Figure 5. Alternative 1, No Action (Existing Fencing)

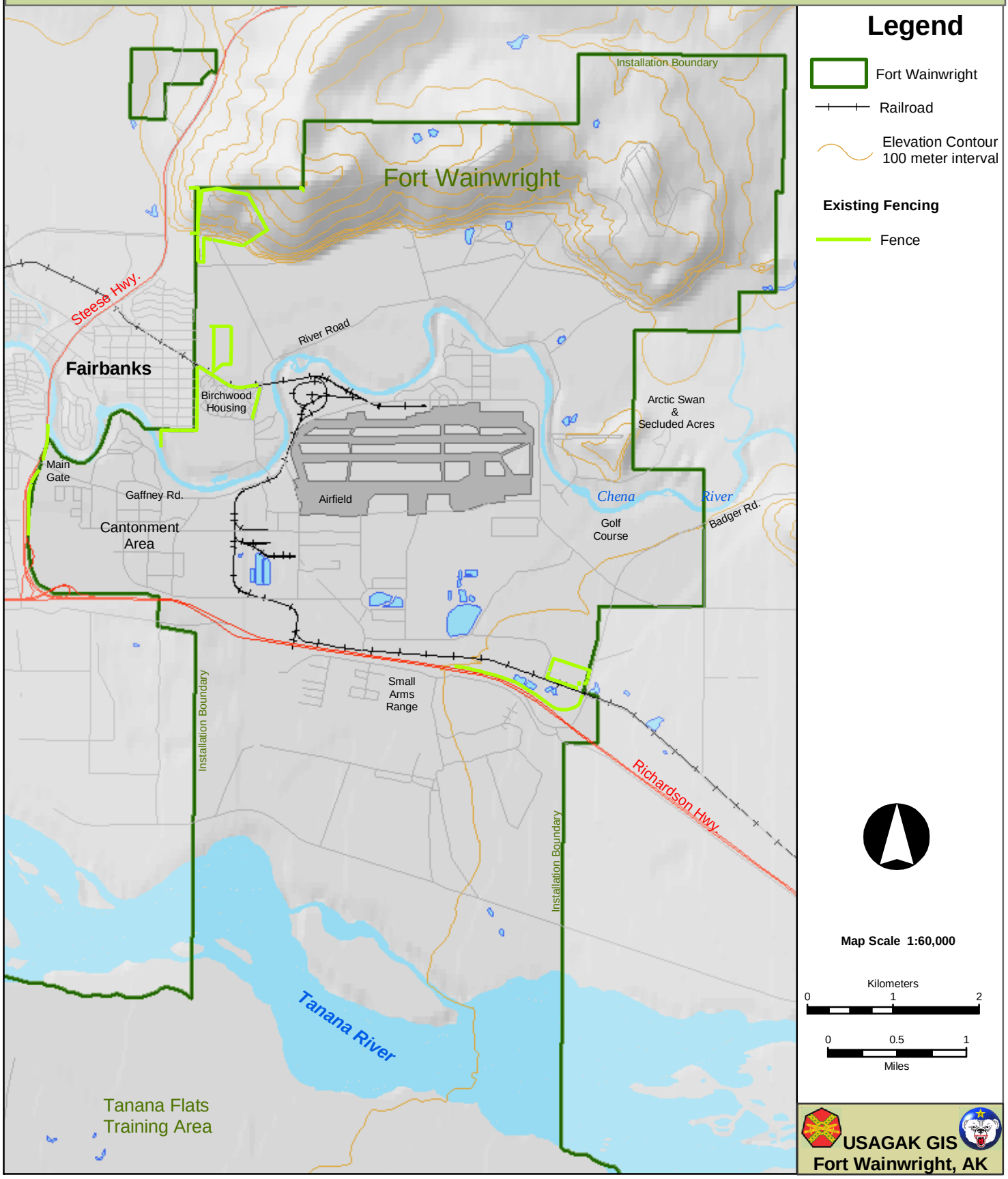

2.3.2 Alternative 2: Main Post Fencing

Approximately 15.7 miles of fencing would be constructed, and the project would encompass the entire Main Post area at Fort Wainwright south of the Chena River, including the golf course near Badger Road (Table 2, Figure 5). The Badger Road section of fence would be of chain-link design and would start where the installation's eastern boundary meets the southern bank of the Chena River. The fence would follow south along the west side of Badger Road, where it meets existing chain-link fence surrounding the DRMO.

The Richardson Highway section would follow the Alaska Railroad right-of-way and would be located approximately 25 feet from the centerline of the railroad right-of-way on military land. The proposed fence would cross the railroad approximately 1,800 feet west of the intersection of South Gate Road and the Richardson Highway. However, the fence would not be constructed within the 50-foot Alaska Railroad right-of-way. The fence would continue west along the north side of the Richardson Highway. To reduce the potential for moose-vehicle collisions along this stretch of the Richardson Highway, one-way moose gates would be installed at intervals yet to be determined to allow moose to safely exit the highway corridor.

Table 2. Description of Proposed Installation Fence at Fort Wainwright Under Alternative 2.

Section	Location Description	Type of Fence	Length (miles)
Badger Road	Along Badger Road from Chena River to intersection with Richardson Highway	Chain Link	2.0
Richardson Highway (south)	Richardson Highway from Badger Road intersection to 0.3 miles west of intersection of South Gate Road	Chain Link	2.7
Richardson Highway (west)	Richardson Highway from 0.3 miles west of intersection of South Gate Road to Gaffney Road	High Security	2.1
Main Gate	Main Gate Area from Gaffney Road to Chena River	Stone Fence and Metal Gate	0.2
Chena River	Along Chena River from Main Gate to Badger Road	Pipe Rail	7.5
Birchwood Housing	From Chena River to Trainor Gate to River Road	Chain Link	1.2
Total			**15.7**

A section of combined security fencing would follow the Richardson Highway, west and north, from about 0.3 mile west of South Gate Road to Gaffney Road. A brick wall would then extend east following Gaffney Road to the Main Gate, then north to the southern bank of the Chena River. A pipe-rail fence would extend east along the southern bank of the Chena River. The 40-inch high pipe rail fence is designed to prevent vehicles (including snow machines and all terrain vehicles) from entering the cantonment area from the Chena River when the river is frozen. Additionally, the Birchwood housing development located north of the Chena River would be fenced with chain-link on the northern, eastern, and southern boundaries of the housing areas. Access gates would be placed to allow access to River Road.

Mitigation: Proposed mitigation measures for Alternative 2 are discussed in Section 2.3.5, Mitigation.

Figure 6. Alternative 2, Main Post Fencing

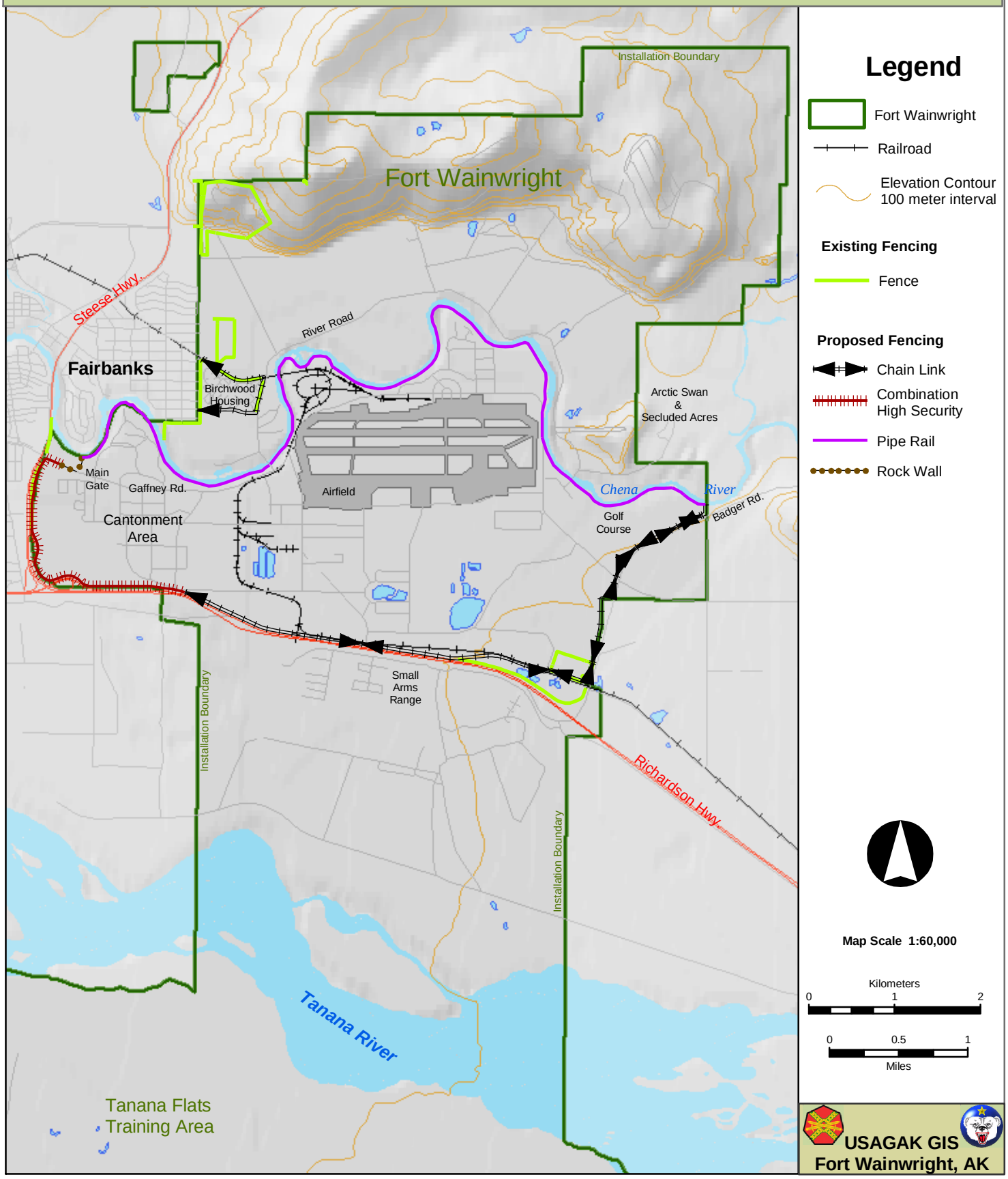

2.3.3 Alternative 3: Main Post Fencing, Excluding Golf Course

The fencing route and designs under Alternative 3 would be identical to Alternative 2 in all respects, with the sole exception that the golf course near Badger Road would remain outside of the new fencing (Table 3, Figure 7). The perimeter of this fence design would be approximately 14.6 miles. The Badger Road section would begin at the East Gate to the Main Post, and the remaining sections along the Richardson and Steese Highways, and Main Gate would remain the same as Alternative 2. The northern boundary would border the southern bank of the Chena River as in Alternative 2, but would end at the east end of the Ladd Field runway.

Table 3. Description of Proposed Installation Fence at Fort Wainwright Under Alternative 3.

Section	Location Description	Type of Fence	Length (miles)
Ketchum, Montgomery and Badger Roads	South along Ketchum Road from Chena River to and along Montgomery Road to and along Badger Road to its intersection with Richardson Highway	Chain Link	2.4
Richardson Highway	Richardson Highway from Badger Road intersection to 0.3 miles west of intersection of South Gate Road	Chain Link	2.7
Richardson Highway	Richardson Highway from 0.3 mile west of intersection of South Gate Road to Gaffney Road	High Security	2.1
Main Gate	Main Gate Area from Gaffney Road to Chena River	Stone Fence and Metal Gate	0.2
Chena River	Along Chena River from Main Gate to east end of Ladd Field runway	Pipe Rail	6.0
Birchwood Housing	From Chena River to Trainor Gate to River Road	Chain Link	1.2
Total			**14.6**

Chain-link fence would begin at the northern end of Ketchum Road extending south to Montgomery Road, then southeast to Badger Road. The chain-link would extend south to the Alaska Railroad right-of-way.

Mitigation: Proposed mitigation measures for Alternative 3 are discussed in Section 2.3.5, Mitigation.

Figure 7. Alternative 3, Main Post Fencing, Excluding Golf Course

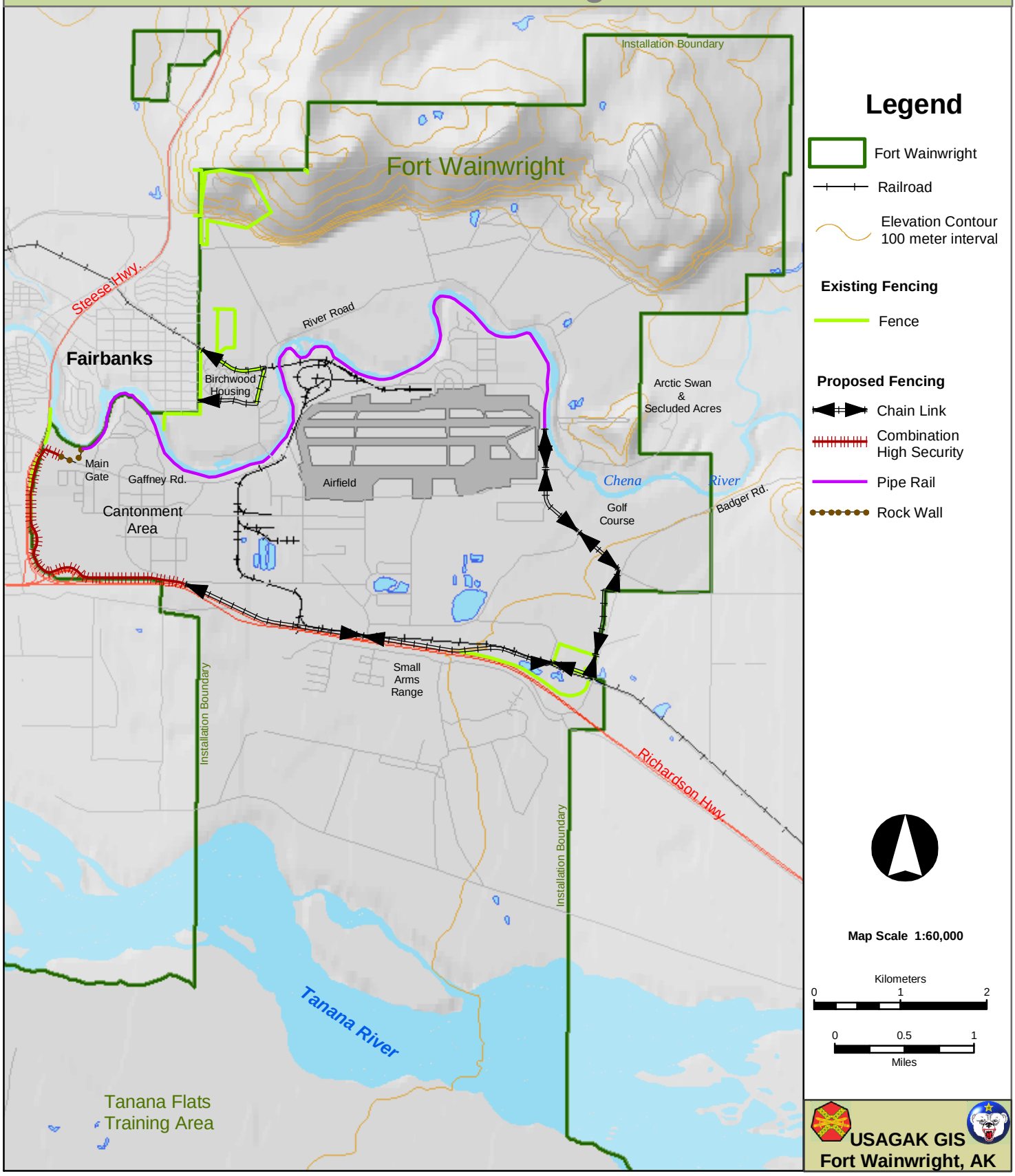

2.3.4 Alternative 4: High Security Fencing

This option would entail construction of a combined security fence to maximize protection from unauthorized entry of both vehicles and pedestrians. The location of the high security fence under Alternative 4 would be identical to Alternative 2 (Figure 7, Table 4). Any existing fence would remain but would be retrofitted or repaired where needed. Where the new combined security fence encounters existing fence it would be placed at a given distance behind it. Gates would be placed to allow for emergency access. This alternative would not include additional law enforcement patrols being conducted, given the higher level of security provided. No gaps to allow for animal movement and pedestrian access would be installed under this alternative, as these would compromise the integrity of the design. A 30-foot construction and maintenance corridor would also be cleared along the proposed route of the fencing.

This alternative meets the purpose and need and objectives of the proposed action by providing overall installation boundary delineation, helping to reduce vehicular trespassing and illegal activities, securing the cantonment area, and increasing the level of training and safety for soldiers. Overall, this alternative provides the highest security for vehicular and pedestrian incursions. However, Alternative 4 would achieve the established purpose and need with the greatest adverse impact to wildlife movement. Fence design and placement under this alternative would also be considered the most visually offensive to residents of adjacent neighborhoods.

Table 4. Description of Proposed Installation Fence at Fort Wainwright Under Alternative 4.

Section	Location Description	Type of Fence	Length (miles)
Badger Road	Along Badger Road from Chena River to intersection with Richardson Highway	High Security	2.0
Richardson Highway	From Badger Road intersection with Richardson Highway to Main Gate.	High Security	4.8
Main Gate	Main Gate Area from Gaffney/Airport Roads to Chena River	Stone Fence and Metal Gate	0.2
Chena River	Along Chena River from Main Gate to Badger Road	High Security	7.5
Birchwood Housing	From Chena River to Trainor Gate to River Road	High Security	1.2
Total			**15.7**

Mitigation: Proposed mitigation measures for Alternative 4 are discussed in Section 2.3.5, Mitigation.

Figure 8. Alternative 4, High Security

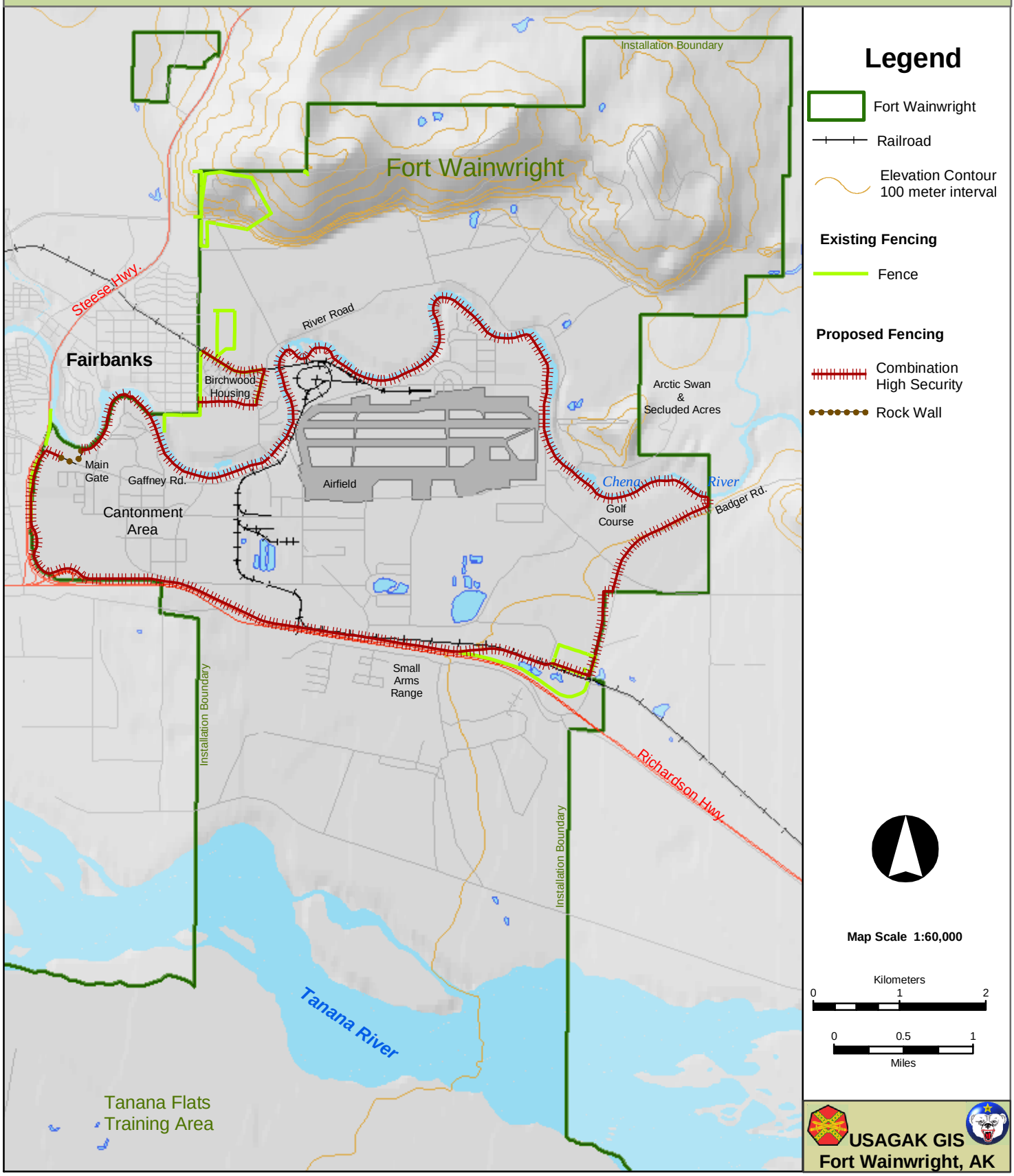

2.3.5 Mitigation

As defined in CEQ Regulation 40 CFR 1508.20, "Mitigation" includes: 1) avoiding the impact altogether, 2) minimizing impacts by limiting the degree or magnitude of the action, 3) rectifying the impact through repairing, rehabilitating, or restoring, 4) reducing or eliminating the impact over time by preservation and maintenance operations, or 5) compensating for the impact by replacing or providing substitute resources or environments.

Several mitigation measures have been proposed as part of the proposed action. The following measures are applicable to alternatives 2, 3, and 4, and would be necessary to avoid potentially significant impacts to the environment.

Air Quality

- Excavations, embankments, stockpiles, haul roads, permanent and temporary access roads, and all other project activities in or outside the project boundaries would be maintained to ensure they are kept free from fugitive dust.
- The applications of water to the soil will control nuisance dust and minimize air quality impacts.

Soils

- Follow established USAG-AK and ADEC reporting procedures if active contamination treatment sites or contaminated soils are discovered during construction.
- Stabilize exposed soils and manage storm water in a manner conforming to the existing Fort Wainwright Storm Water Pollution Prevention Plan.
- Avoiding berming or removal of surface soils during the vegetation clearing or grubbing operations in order to improve natural revegetation.

Vegetation

- A strip of natural riparian vegetation would be left intact along the banks of waterways (i.e., vegetation in the 30-foot maintenance corridor would not be cleared to the edge of the waterway) to mitigate for potential loss of cover and forage area as well as for increased chances of erosion and downstream siltation.
- Within the 30-foot maintenance corridor, vegetation will be managed to prevent the establishment of invasive plant species, to maintain a low vegetative cover, and to utilize prescribed burns, if necessary.
- Harvestable timber would be stockpiled. If any harvesting would occur then it would be coordinated with the USAG-AK installation forester. Timber that is stockpiled during construction would also be coordinated through the installation forester.

Water Resources

- Seeding, hay bail placement, siltation fence techniques and other appropriate engineering controls during and following construction would stabilize exposed soils and control storm water runoff.
- Storm water would be managed in a manner conforming to the existing Fort Wainwright Storm Water Pollution Prevention Plan.
- If necessary, USAG-AK would apply for a Fish Habitat Permit from the Alaska Department of Natural Resources, Office of Habitat and Permitting.

Floodplains

- The proposed fencing would be placed five feet outside of the high-water mark to mitigate for potential flood hazards.

- If necessary, USAG-AK would apply for a Fish Habitat Permit from the Alaska Department of Natural Resources, Office of Habitat and Permitting. Conditions to apply for a permit include: if fence posts are placed on stream banks, inside of the normal high-water mark; if the stream bank is altered; if any element of the fence is installed within the waterway; or if, during the course of construction, it becomes necessary to cross a body of water with a piece of construction equipment. These actions are not anticipated.

Wetlands

- All construction activities in wetlands would be conducted during winter months to prevent damage to wetlands.
- Hydro-axing would be completed during the winter months when sufficient snow cover (a minimum of six inches) and frozen ground (a minimum of 12 inches) exists to prevent mechanical disturbance in wetland areas.
- A Section 404 permit from the U.S. Army Corps of Engineers would be applied for to complete work within jurisdictional wetlands, when necessary, prior to the initiation of the proposed action.

Fisheries

- The proposed fencing would be placed five feet outside of the high-water mark to mitigate for potential flood hazards.
- A strip of natural riparian vegetation would be left intact along the banks of waterways (i.e., vegetation in the 30-foot wide construction and maintenance corridor would not be cleared to the edge of the waterway) to mitigate for potential loss of cover and forage area as well as for increased chances of erosion and downstream siltation.
- Any in-water construction in anadromous streams would occur during the time period between mid-May and mid-July to mitigate for potential disruptions during critical time periods in the life cycle of anadromous fish. This action is not anticipated.
- Any crossing of anadromous waterways with construction equipment would be done when the waterway is frozen and may require a Fish Habitat Permit from the Alaska Department of Natural Resources, Office of Habitat Management and Permitting.

Wildlife

- Utilize a pipe rail fence design (bottom rail with 22-inch clearance and top rail with 40-inch height) along the Chena River to accommodate small, medium, and large mammals under Alternatives 2 and 3.
- Under Alternatives 2 and 3, install moose gates within the chain link fencing along highways at appropriate locations to allow moose and other animals to exit the highway corridor safely.

Public Access and Recreation

- Under Alternative 2, a gate would be placed near the golf course to allow maintenance vehicles access to the fenced-in portion of Main Post.
- Maintain access to Fort Wainwright through use of the Recreation Access Permit and the U.S. Army Recreation Tracking System (USARTRAK). Recreational users must call-in to obtain a permit and find information on range closures and document their intended recreational use.

Fire Management

- The Alaska Fire Service would be given access onto military lands from different points along the boundary for initial attack and suppression of wildfires.

- Dimensions of gates would accommodate personnel as well as fire engines and larger equipment.
- Vegetation would be actively managed within 15 feet of the fence to reduce the potential spread of wildland fires and to provide access for Alaska Fire Service during potential wildland fires.
- A site visit would be coordinated with the Division of Forestry Area Forester and Alaska Fire Service after fence placement to determine buffer zone maintenance methods. The buffer zone would be maintained to prevent regeneration of flammable, prolific invasive species and reduce human safety risks from fire danger in areas with a high human population.

Cultural Resources

- If cultural resources were located during construction, mitigation measures, including halting excavation or associated construction activity pending notification to the USARAK Cultural Resources Manager would be implemented.

2.4 Description of Alternatives Considered and Eliminated from Detailed Study

Besides the four alternatives discussed above, four other alternatives were considered and eliminated because they failed to satisfy the purpose and need for the proposed action, were cost prohibitive, or were otherwise infeasible. These alternatives will not be brought forward for further analysis in this EA.

A cost estimate and economic analysis was done comparing the below alternatives to the reasonable alternatives mentioned above. This can be found in the document requesting construction (Form 1391) available in the strategic planning administrative file, Fort Wainwright, Alaska.

2.4.1 Entire Main Post Boundary

This alternative proposes a fence that encompasses the entire boundary of the Main Post, including all areas north as well as south of the Chena River. This alternative was found to be cost prohibitive, due to the extensive length of fence required.

2.4.2 Tie into the Current DOT Fence

A Department of Transportation (DOT) fence currently exists in the southeast corner of the Main Post. Placement of a perimeter security fence parallel to the present DOT fence would isolate fishing ponds on the north and south ends. Moreover, this alternative would not meet the Army's purpose and need, because of the limited length of the current DOT fence, as well as its 5-foot design.

2.4.3 North of River Road

Placement of the new perimeter security fence along the north side of River Road is another alternative that was considered. However, this alternative would fragment access to the training areas within the Main Post, and multiple gates would be needed and these would need to be monitored during high security alerts. As a result, this alternative was found to be cost prohibitive.

2.4.4 Increasing Sentry Patrols and Enforcement

This alternative would not involve installing fencing, but would consist solely of enhancing patrols and other enforcement along the reservation boundary to minimize unauthorized access.

This alternative has been eliminated because it would not satisfy the purpose and need of the proposed action and would not be possible to station patrols along lengthy segments of the reservation boundary at all times given staffing requirements. In addition, this alternative would be extraordinarily costly and difficult, if not impossible, in those portions of the reservation where the boundary is not clearly delineated.

2.5 Summary of Environmental Consequences

Table 5 contains a summary matrix of the alternatives comparing their environmental consequences for the specific resource categories. Chapter 3 contains a more detailed discussion of the environmental consequences of the proposed action and alternatives. The qualitative terms used in the matrix are generally defined as:

- None – No impact is expected to occur.
- Minor – Impacts are expected to occur; impacts would be measurable and may have slight impact to resource.
- Moderate – Impacts are expected to occur; impacts would be noticeable and would have a measurable effect on resource.
- Severe – Impacts are expected to occur; impacts would be obvious and would have serious consequences to resource.
- Beneficial – Only beneficial impacts are expected to occur.

Table 5. Summary of Environmental Consequences for the Proposed Alternatives and Identification of Relevant Issues.

RESOURCE/ISSUE	PERIMETER SECURITY FENCING			
	Alternative 1: No Action	**Alternative 2: Main Post**	**Alternative 3: Main Post, Excluding Golf Course**	**Alternative 4: High Security**
Air Quality	None	Minor	Minor	Minor
Soils	None	Minor	Minor	Minor
Vegetation	None	Minor	Minor	Minor
Water Resources	None	Minor	Minor	Minor
Floodplains	None	Minor	Minor	Minor
Wetlands	None	Minor	Minor	Minor
Fisheries	None	Minor	Minor	Minor
Wildlife	None	Minor	Minor	Moderate/Severe
Public Access and Recreation	None	Minor	Minor	Minor/Moderate
Infrastructure	None	Minor	Minor	Minor
Fire Management	None	Minor	Minor	Minor
Cultural Resources	None	Minor	Minor	Minor
Environmental Justice (Minority, Low-Income, and Children)	None	Minor/Benficial	Minor/Benficial	Minor/Benficial
Socioeconomics	None	Minor	Minor	Minor
Aesthetics	None	Minor	Minor	Moderate

3.0 DESCRIPTION OF THE AFFECTED ENVIRONMENT AND ENVIRONMENTAL CONSEQUENCES OF THE PROPOSED ACTION AND ALTERNATIVES

A general overview of the existing physical and biological environment is presented and is based on the more detailed discussion of the existing conditions at Fort Wainwright found in the Integrated Natural Resources Management Plan 1998-2003 (USAG-AK 2002). This section also discloses the environmental effects for the proposed action and alternatives. Mitigation for the proposed action is included in this section.

This section also discloses the environmental effects for the proposed action and alternatives. The following resource categories have different impacts depending on alternative. Those alternatives with unique impacts are discussed separately. In instances where resource categories have impacts that are common among all action alternatives, the discussion is combined. Mitigation for the proposed action is also included in this section.

Table 6 lists examples of actions that would create significant impacts for each area being analyzed.

Table 6. Thresholds[1] of impacts in relation to issue and region of influence.

Resource/Issue of Concern	Region of Influence	Threshold[2]
Air Quality	Installation and immediate surrounding area	A violation of National Ambient Air Quality Standards, violation of Title V Operating Permit, and/or violation of National Emission Standards for Hazardous Air Pollutants.
Soils	Installation watersheds	Erosion resulting in soil loss or compaction that precludes establishment of native vegetation, sediment delivery, unpermitted construction during summer months, or unpermitted mechanical drilling.
Vegetation	Landscape scale	Fragmentation, loss, or degradation of high quality natural areas or sensitive sites; local extirpation of rare or sensitive plant species; the introduction or increased prevalence of undesirable non-native species or the waste of salvageable timber.
Water Resources	Watersheds	Unpermitted deposition of dredged or fill materials into wetlands or other "Waters of the US", a violation of state water quality criteria, a violation of federal or state discharge permits, crossing of waterway with heavy equipment, and/or potential degradation of an aquifer.
Wetlands	Watersheds	A net loss of wetlands within installation boundaries (unmitigated)
Floodplains	Within 100-year floodplain	Impede or channelize stream flow within a floodplain, unpermitted placement of structures inside normal high-water mark, or within waterway.
Fisheries	Watersheds	Impede movement or access to habitat. Cause removal of direct cover and foraging area; or conduct unpermitted work in anadromous streams, especially during critical anadromous fish life cycles (mid-May to mid-July).
Wildlife	Landscape scale	Population-level impacts (e.g., potential to reduce local populations below self-sustaining levels, or long-term loss or impairment of substantial portions of local habitat

Table 6. Thresholds[1] of impacts in relation to issue and region of influence.

Resource/Issue of Concern	Region of Influence	Threshold[2]
		[species specific]; direct impacts/disturbance to birds protected by the Migratory Bird Treaty Act.
Public Access and Recreation	Installation and immediate surrounding area	Significant impact upon levels of recreational use or displace a significant number of users to alternate locations to pursue recreational opportunities.
Infrastructure	Installation and immediate surrounding area	Significantly altered land or airspace use patterns.
Fire Management	Landscape scale	Significantly increased risk of fire or reduced access for fire protection crews.
Cultural Resources	Installation boundary	Irreversible damage to a prehistoric or historic site that is listed or is eligible for listing on the National Register of Historic Places or is listed as a National Historic Landmark.
Environmental Justice	Installation and immediate surrounding area	Disproportionate impacts to minorities or low-income individuals, or causes health and safety risks for children.
Socioeconomics	Regional scale	Significant impacts on levels of employment or family income.
Aesthetics	Installation and immediate surrounding area	Significantly altered views, particularly in natural areas.

[1]Although some thresholds are designated based on legal or regulatory limits or requirements, others reflect discretionary judgment and best management practices on the part of the Army in accomplishing its primary mission of military readiness, while also fulfilling its conservation stewardship responsibilities. Quantitative/qualitative analyses may be used, if appropriate, in determining whether, and the extent to which, a threshold is exceeded.

[2]Thresholds listed are for potential effects of the proposed action prior to or without mitigation.

3.1 Air Quality

3.1.1 Affected Environment

Fort Wainwright currently operates in accordance with Air Quality Operating Permit No. 236TVP01, issued by ADEC in April 2003. The current permit is required by Title V of the Clean Air Act Amendments of 1990 for all stationary (nonmoving) sources of air pollution that have the potential to emit air pollutants in specific "threshold" quantities. Fort Wainwright's Title V permit details its process equipment, air-pollution-control equipment, and monitoring and reporting requirements. Fort Wainwright's Title V permit is available for viewing at the ADEC's website.

Fort Wainwright is located within the Northern Alaska Intrastate Air Quality Control Region (AQCR). With the exception of Carbon Monoxide (CO), the ADEC has classified the air quality surrounding the facility as in attainment or unclassifiable with respect to all National Ambient Air Quality Standards (NAAQS), which are established by the EPA to protect human health. Fairbanks is susceptible to CO violations during the winter, owed to the presence of strong temperature inversions that impede the dispersion of ground-level emissions from automobiles. Fairbanks has not recorded a violation of the CO NAAQS since 1999.

Because a portion of Main Post is located within the Fairbanks North Star Borough CO nonattainment area, the facility is subject to the provisions of the General Conformity Rule, which requires providing a demonstration that Federal actions do not hinder attainment of the NAAQS or impede local efforts to control air pollution. If impacts are identified, mitigation measures must be identified and included in the conformity documentation for the project. The General Conformity Rule has been addressed in this document.

3.1.2 Environmental Consequences of Alternative 1: No Action
Under this alternative, no new fencing would be installed at Fort Wainwright. Air quality would not be adversely affected under the No Action Alternative.

3.1.3 Environmental Consequences of Alternative 2: Main Post Fencing, Alternative 3: Main Post Fencing, Excluding the Golf Course, and Alternative 4: High Security Fencing
Air quality impacts would increase slightly under these Alternatives, but the effects would be minor and temporary. Because the main differences between Alternatives 2 or 4 and Alternative 3 are only on the eastern boundary, the air quality impacts are expected to be very similar. These impacts would be limited to construction vehicle emissions and fugitive dust from equipment operation, and would be well below the threshold of significance for air quality as described in Table 6.

The emissions during construction are expected to be insignificant and temporary in nature. Estimated emissions from the operation of the construction equipment are described in Table 7.

The contractor of the construction project would be required to maintain excavations, embankments, stockpiles, haul roads, permanent and temporary access roads, and all other project activities in or outside the project boundaries to control fugitive dust. The application of water to the soil would minimize air quality impacts from dust.

Since the proposed locations for the fencing project are located in the CO nonattainment area, the General Conformity Rule as described in 40 CFR Part 93, Subpart B, does apply. Typically, periodic nonattainment episodes occur during the winter and spring months during periods of strong inversions in the Fairbanks region. A record of non-applicability (RONA) has been prepared for this project. Increased emissions associated with the operation of construction equipment would be temporary in nature.

Table 7. Summary of Emissions Associated with Construction Equipment Operation.

EQUIPMENT	POLLUTANT			
	CO Lbs/hr	**NO_x** Tons Per Year	**SO_x** Tons Per Year	**PM_{10}** Tons Per Year
Diesel Excavators	0.01	0.02	< 0.00	< 0.00
Fork Lift 175 Hp Diesel	2.36	6.99	< 0.00	0.42
Off-Highway Tractors Diesel	0.10	0.08	0.01	0.01
Other Construction Equipment Diesel	0.19	0.23	0.02	0.01
Other Construction Equipment Gas	5.39	0.10	< 0.00	< 0.00
Rough Terrain Fork Lifts Diesel	0.03	0.03	< 0.00	< 0.00
Tamper/Rammers Other Gas	1.09	0.01	< 0.00	< 0.00
Tracked Tractor Diesel	0.20	0.71	0.08	0.06
Tractor/Loader/Backhoe Diesel	0.01	0.02	< 0.00	< 0.00
Welders < 50 Hp Diesel	0.03	0.05	0.01	< 0.00

Table 7. Summary of Emissions Associated with Construction Equipment Operation.

EQUIPMENT	POLLUTANT			
	CO Lbs/hr	**NO_x** Tons Per Year	**SO_x** Tons Per Year	**PM_{10}** Tons Per Year
Wheeled Tractor Diesel	4.01	1.42	0.10	0.16
TOTAL EMISSIONS	13.42	9.66	0.22	0.66

Mitigation
Measures to mitigate air quality impacts are proposed for Alternatives 2, 3, and 4. These include the following:

- Excavations, embankments, stockpiles, haul roads, permanent and temporary access roads, and all other project activities in or outside the project boundaries would be maintained to ensure they are kept free from fugitive dust.
- The applications of water to the soil will control nuisance dust and minimize air quality impacts.

3.2 Soils

3.2.1 Affected Environment
The proposed project area lies within the Tanana-Kuskokwim Lowland of the Western Alaska province. Alluvial deposits from the Tanana and Chena Rivers underlie the area. The affected region has little to no prior disturbances associated with construction. Soils in this area are generally Quaternary deposits characterized by shallow silt loam over gravelly sand or silt loam with sandy clay loams of widely variable texture. Soils adjacent to the rivers and their tributaries are classified Salchaket Association and soils in the upland sites were classified by the as Fairbanks-Steese-Gilmore Association (USARAK 1999).

Contamination Issues
All of Fort Wainwright was listed on the Environmental Protection Agency (EPA) National Priorities List on August 30, 1990 under the auspices of the Comprehensive Environmental Response, Compensation and Liability Act of 1980 (CERCLA), also known as Superfund (*et seq*.). In the spring of 1992, the Army, EPA, and ADEC signed a Federal Facility Agreement, which requires a thorough investigation of suspected historical hazardous waste source areas and appropriate remediation actions taken to protect public health. Fort Wainwright is currently in the process of clean-up activities under an Installation Restoration Plan. Any discovery of hazardous material contamination as outlined in the Federal Facilities Agreement would require appropriate regulatory coordination and compliance. For more information concerning the *Superfund* status of Fort Wainwright see the *Administrative Record* (Department of Public Works, Environmental Resources Department 1994). Additionally, the 2002 Installation Action Plan for Fort Wainwright has been reviewed and is available at Fort Wainwright's Department of Public Works Environmental office.

3.2.2 Environmental Consequences of Alternative 1: No Action
Under this alternative, no new fencing would be installed at Fort Wainwright. The conditions are expected to remain the same under the No Action Alternative. In addition, there would be no impacts to the Superfund site or specific remediation areas.

3.2.3 Environmental Consequences of Alternative 2: Main Post Fencing, Alternative 3: Main Post Fencing, Excluding Golf Course, and Alternative 4: High Security Fencing

Minor short-term impacts to soils are expected under Alternatives 2, 3 and 4. These impacts would result from compaction and some soil loss may occur near waterways. These impacts would be below the threshold of significance for soil impacts described in Table 6.

A 30-foot corridor would be created along the proposed installation boundary fencing. This corridor would be used by construction equipment during initial fence construction. These vehicles would include several large pick-up trucks, and larger trucks to haul supplies and equipment and to provide the manpower to construct the fence. A rubber tire-mounted hydro-axe and a feller buncher would be needed to cut and remove the trees in the corridor. These vehicles would compact soils along the fence route, which may lead to reducing water absorption during storm water runoff events. Water runoff could lead to increased erosion in areas with exposed soils and result in sediment delivery to nearby waterways. Surface soils would also be disrupted when dozers grub tree roots. Minor erosion impacts may occur where the fence will be located on the bank of the Chena River. Precautions would be taken to ensure soil impacts would be limited.

Actual fence placement would have minimal impact to soils since the vast majority of fence posts would be pile-driven into the ground.

Recreational vehicles such as ATVs, BMX type motorcycles and bicycles, and ARGOs, would have access to the areas that are hydro-axed inside the fence. These areas will tend to become trails for off-road vehicle use. This could lead to problems in areas underlain with permafrost because repeated traffic removes the top layer of soil and causes the permafrost to thaw. Ponding occurs in areas where vehicles cause ruts.

Contamination Issues
The fence section following the south side of the Chena River could have moderate impacts to restoration sites. A number of the restoration treatment sites with active treatment systems are near the proposed fence corridor. Wells and horizontal lines could be damaged and soil contamination could be encountered during the construction activities (depending on the fence post depths). Additionally, the Air Sparge Curtain in Operable Unit 5 is along the south bank of the Chena River and appears to be directly in the proposed route.

Other sections of the fence could result in minor impacts to restoration. Two areas of highest concern, Operable Unit 2 (DRMO Yard, along Badger Road and the Richardson Highway) and Operable Unit 3 (Birch Hill Tank Farm) are already fenced. Only repair and reinforcement would be necessary at these sites; moreover, the sites are not within proposed fence corridor. This includes the USTs at 5010, part of the DRMO yard. All USTs at the Birch Hill UST site have been removed, and the site declared “no further action.”

Mitigation
Measures to mitigate soil impacts are proposed for Alternatives 2, 3, and 4. These include the following:

- Follow established USAG-AK and ADEC reporting procedures if active contamination treatment sites or contaminated soils are discovered during construction.
- Stabilize exposed soils and manage storm water in a manner conforming to the existing Fort Wainwright Storm Water Pollution Prevention Plan.
- Avoid berming or removal of surface soils during the vegetation clearing or grubbing operations in order to improve natural revegetation.

3.3 Vegetation

3.3.1 Affected Environment

The Fort Wainwright area is within the Northern Boreal Forest. The Main Post area south of the Chena River is mostly human modified. Landscaped lawns, overgrown lots (including native and invasive species), and second growth woodlands (balsam poplar, aspen, and alders) are the dominant vegetative types found in the area. Specifically, fence alternatives 2, 3, and 4 would pass through various forest-types including: white spruce (*Picea glauca*), black spruce (*Picea mariana*, balsam poplar (*Populus balsamifera*), and paper birch (*Betula papyrifera*). Understory consists of wild rose, willow, fireweed, and grasses. Portions of the proposed fence line may contain timber that is of commercial quality and/or quantity. See Appendix B for details of the timber use policy for Fort Wainwright.

3.3.2 Environmental Consequences of Alternative 1: No Action

Under this alternative, Fort Wainwright would not construct the proposed fencing project. Therefore, there would be no detrimental impact to vegetation.

3.3.3 Environmental Consequences of Alternative 2: Main Post Fencing

Impacts would be relatively minor and below the threshold of significance described in Table 6.

The fence corridor would be 15.7 miles long, potentially affecting about 57.1 acres of vegetation on the 13,700 acre Main Post. The vegetation types along the fence corridor would change in most areas. Any woodlands or shrub-dominated areas would be cleared to ground level and converted to and maintained as herbs and grasses. Shrub growth would be inhibited within the fence corridor for security purposes. Other vegetation impacts would be temporary in nature and disturbed areas would be re-vegetated upon construction termination.

Avoidance of making berms or removing surface soils during the vegetation clearing operations would improve the re-vegetation process and would allow natural re-vegetation of the cleared area herbaceous and deciduous plants. Vegetation along the fence line would be maintained at a herb/grass stage. The impact to the natural setting would be relatively temporary in nature due to the fast recovering vegetation.

A strip of natural riparian vegetation would be left intact along the banks of waterways. Along riparian areas, such as the Chena River, vegetation within the 30-foot wide construction and maintenance corridor would not be cleared to the edge of the waterway. This would maintain existing cover and forage area for aquatic species. Protection of the riparian vegetation would also decrease the occurrence of erosion and downstream siltation.

The Bureau of Land Management (BLM) owns most of the timber resources affected by the proposed action, and the BLM requires the salvage of usable material. A one-time timber sale, conducted on the proposed site to clear timber for fence construction, may be required. However, this type of removal may be impracticable because of availability of timber markets in Fairbanks. An alternative action would be to place usable material at established firewood cutting areas. The current value of any timber owned by USAG-AK and removed by construction contractors would be deposited in the Army Forestry Reserve Account if it were removed without a timber sale (U.S. Army Regulation, 200-3). The contractors would, in effect, purchase the timber from the Army. The current value of such timber, based on State of Alaska, Division of Forestry fuelwood timber sales, is approximately $5.00 per hundred cubic feet of timber. A timber cruise would be conducted to determine the volume and value of affected timber after the exact fencing footprint is determined.

3.3.4 Environmental Consequences of Alternative 3: Enhanced Cantonment Fencing

Approximately 14.6 miles of fence would be constructed with Alternative 3, which would impact about 55.4 acres of vegetation on the 13,700 acre Main Post. Impacts to other factors would be similar to Alternative 2.

3.3.5 Environmental Consequences of Alternative 4: High Security Fencing

The fence corridor would be identical to Alternative 2. Impacts to vegetation would also be identical to Alternative 2.

3.3.6 Mitigation

Mitigation measures have been proposed as part of the proposed action. The following measures are applicable to Alternatives 2, 3, and 4.

- A strip of natural riparian vegetation would be left intact along the banks of waterways (i.e., vegetation in the 30-foot maintenance corridor would not be cleared to the edge of the waterway) to mitigate for potential loss of cover and forage area as well as for increased chances of erosion and downstream siltation.
- Within the 30-foot maintenance corridor, vegetation will be managed to prevent the establishment of invasive plant species, to maintain a low vegetative cover, and to utilize prescribed burns, if necessary.
- Harvestable timber would be stockpiled. If any harvesting would occur then it would be coordinated with USAGAK installation forester. Timber that is stockpiled during construction would also be coordinated through the installation forester.
- Use existing large white spruce and paper birch in the landscape design if possible.

3.4 Water Resources

3.4.1 Affected Environment

The Fort Wainwright cantonment area lies within the Tanana River drainage basin. Drainage flows from several different rivers and creeks that feed the Tanana River system. These include the Chena River, Flood Channel B, and Clear Creek. The most likely rivers to be affected by fence boundary are the Chena River and the Tanana River, which have been classified as having good water quality. Streams, creeks, ponds, lakes and rivers typically have pH values within state of Alaska standards. The Tanana River has variable sediment loadings, ranging between 300 mg/l during periods of high stream flow and 5 mg/l during quieter periods.

The U. S. Fish and Wildlife Service's National Wetlands Inventory Program has classified a small percentage of the Fort Wainwright Main Post area as wetlands. The U. S. Army Corps of Engineers Regulatory Branch has confirmed this classification. Wetlands are most commonly found in the alluvial valley floors that are underlain by permafrost. Concerns about groundwater quality at Fort Wainwright are described in the *Administrative Record* of the Defense Environmental Restoration Program being administered by the U. S. Army, the EPA, and the ADEC for Fort Wainwright (USAG-AK 1994).

3.4.2 Environmental Consequences of Alternative 1: No Action

Under this alternative, Fort Wainwright would not construct the proposed fencing project. Therefore, there would be no detrimental impacts to water quality.

3.4.3 Environmental Consequences of Alternative 2: Main Post Fencing, Alternative 3: Main Post Fencing, Excluding Golf Course, and Alternative 4: High Security Fencing

Impacts to water quality under Alternatives 2, 3, and 4 would be minor and below the threshold of significance described in Table 6. The fence would be constructed five feet south of the Chena River's high-water mark. There would be minimal sediment contributions to the rivers and streams along the proposed fencing corridor.

The proposed fencing would terminate on either side of any waterways that cross the fence corridor. In addition, construction of the proposed fencing in wetlands would occur only during the winter when the ground is frozen. Minimal vehicle use is expected during construction. Disruption to the surface soil would also be minimal because the fence posts would be pounded into the ground.

Although impacts to storm water management are not expected, sediment release from construction would be mitigated through the compliance with Fort Wainwright's Storm Water Pollution Prevention Plan. If erosion resulted from construction or maintenance activity then further mitigation including check dams and silt fences may be used.

A Fish Habitat Permit from the Alaska Department of Natural Resources, Office of Habitat Management and Permitting, may be required if fence posts are placed on stream banks, inside of the normal high-water mark, if any element of the fence is installed within the waterway, or if it becomes necessary to cross a body of water with a piece of construction equipment. This permit would be obtained prior to construction of the proposed fencing. However, these actions are not anticipated.

3.4.4 Mitigation

Mitigation measures have been proposed as part of the proposed action. The following measures are applicable to Alternatives 2, 3, and 4.

- Seeding, hay bail placement, siltation fence techniques and other appropriate engineering controls during and following construction would stabilize exposed soils and control storm water runoff.
- Potential storm water impacts would be managed in a manner conforming to the existing Fort Wainwright Storm Water Pollution Prevention Plan.
- Apply for a Fish Habitat Permit from the Alaska Department of Natural Resources, Office of Habitat and Permitting, if necessary.

3.5 Floodplains

3.5.1 Affected Environment

Executive Order 11988, *Floodplain Management*, states that structures should not impede or channelize stream flow. This Executive Order also requires that alternatives to development within a floodplain be considered.

All of the alternative fencing sites lie within the 100-year flood plain for both the Chena and Tanana Rivers with average depths of less than one foot or with drainage areas less than one square mile. All of the alternative sites are protected from the 100-year flood with levees. The Chena River Flood Control Project protects this portion of the floodplain. Fort Wainwright last flooded in September 1967.

3.5.2 Environmental Consequences of Alternative 1: No Action

Under this alternative, Fort Wainwright would not construct the proposed installation fencing. Therefore, there would be no floodplain/waterway impact.

3.5.3 Environmental Consequences of Alternative 2: Main Post Fencing, Alternative 3: Main Post Fencing, Excluding Golf Course, and Alternative 4: High Security Fencing

Complete avoidance of the floodplain is not possible. Moreover, no practicable alternatives to placement of the fence outside the floodplain exist.

Development of the fence may result in minor impacts along the Chena River. The pipe-rail design would not impede or channelize flow and would minimize this impact. The impacts would be below the threshold of significance that is described in Table 6. Additionally, the pipe-rail fencing would be placed approximately five feet outside of the high-water mark to mitigate for potential flood hazards. The stone fence would not extend beyond the high-water mark, thus flow along the Chena River would not be impeded during flood events.

The proposed chain link fencing along on the east, south and portions of the cantonment area could impede and channelize stream flows given a large hydrological event. The relatively small mesh of the proposed chain link fencing design would have the tendency to collect large amounts of debris on the up current side of the fence. This potential blockage would prevent the natural, free flow of water and could cause ponding or flooding in areas not previously affected during flood events. However, there are no major tributaries or streams that would be crossed by the chain link fencing, and thus it will have only a minor impact to floodplains.

3.5.4 Mitigation

Mitigation measures have been proposed as part of the proposed action. The following measures are applicable to Alternatives 2, 3, and 4.

- The proposed fencing would be placed five feet beyond the high-water mark to mitigate for potential flood hazards.
- Apply for a Fish Habitat Permit from the Alaska Department of Natural Resources, Office of Habitat and Permitting, if fence posts are placed on stream banks, inside of the normal high-water mark; if the streambank is altered; if any element of the fence is installed within the waterway; or if, during the course of construction, it becomes necessary to cross a body of water with a piece of construction equipment.

3.6 Wetlands

3.6.1 Affected Environment

The U. S. Fish and Wildlife Service's (USFWS) National Wetlands Inventory Program has classified a small percentage of the Fort Wainwright Main Post area as wetlands. The U. S. Army Corps of Engineers Regulatory Branch has confirmed this classification. Wetlands are most commonly found in the alluvial valley floors that are underlain by permafrost. Concerns for groundwater quality are contained in the *Administrative Record* of the Defense Environmental Restoration Activity (DERA) clean-up program being administered by the U. S. Army, the EPA and the ADEC for Fort Wainwright (USARAK 1994).

3.6.2 Environmental Consequences of Alternative 1: No Action

Under this alternative, no new fencing would be installed at Fort Wainwright. Wetlands would not be affected under the No Action Alternative.

3.6.3 Environmental Consequences of Alternative 2: Main Post Fencing, Alternative 3: Main Post Fencing, Excluding Golf Course, and Alternative 4: High Security Fencing

Complete avoidance of wetlands is not possible. Moreover, no practicable alternatives to placement of the fence outside of wetlands exist.

There would be minor disturbances to wetlands resulting from clearing of the 30-foot maintenance corridor. The initial construction activity would result in temporary disturbances to areas considered to be wet, consequently temporarily affecting surface water. Vehicle access on wetlands during the summer months would cause ponding and running effects, which would be temporary in nature during the construction period. The impacts would be below the threshold of significance described in Table 6.

If construction occurs during summer months then all activity would be restricted to foot traffic. Mechanical clearing of the fence line would occur during the winter months to reduce wetland impacts. Water quality would be minimally impacted but, if necessary, a storm water pollution prevention plan would be prepared. If erosion would occur due to construction or maintenance activity then further mitigation including check dams and silt fences may be used.

The fence would extend through approximately 33.6 acres of wetlands under Alternatives 2 and 4. USAG-AK would apply for a wetland permit, if necessary. A wetland permit would be required if cement footings are used. If all postholes were pounded inside wetlands, then a wetland permit would not be required. The U.S. Army Corps of Engineers Regulatory Branch will not determine if the fencing project would require a wetland permit until the FNSI, for this EA has been signed, and a preferred alternative has been chosen.

The impacts to wetlands from Alternative 3 would be essentially the same as Alternative 2**.** The fence would extend through about 33.3 acres of wetlands if Alternative 3 were selected.

3.6.5 Mitigation

Mitigation measures have been proposed as part of the proposed action. The following measures are applicable to Alternatives 2, 3, and 4.

- All construction activities in wetlands would be conducted during winter months to prevent damage to wetlands.
- Hydro-axing would be completed during the winter months when sufficient snow cover (a minimum of six inches) and frozen ground (a minimum of 12 inches) exists to prevent mechanical disturbance in wetland areas.
- A Section 404 permit from the U.S. Army Corps of Engineers would be applied for to complete work within jurisdictional wetlands, if necessary, prior to the initiation of the proposed action.

3.7 Fisheries

3.7.1 Affected Environment

The Chena River supports Arctic grayling, king salmon, chum salmon, sheefish, humpback whitefish, round whitefish, Arctic lamprey, least cisco, Alaska blackfish, burbot, longnose sucker,

northern pike, slimey sculpin, and lake chub. The Chena River is an important spawning area for summer chum and king salmon.

No threatened or endangered fish species from federal or Alaska state listings occur in waterways on Fort Wainwright.

3.7.2 Environmental Consequences of Alternative 1: No Action

Under this alternative, Fort Wainwright would not construct the proposed fence. Therefore, there would be no detrimental impact to fisheries on the installation.

3.7.3 Environmental Consequences of Alternative 2: Main Post Fencing, Alternative 3: Main Post Fencing, Excluding Golf Course, and Alternative 4: High Security Fencing

Minor impacts to fish species within the Chena River and streams on post would be expected if the proposed fence were constructed. The impacts would be negligible and below the threshold of significance for fisheries described in Table 6.

The proposed fencing would terminate on either side of waterways that cross the fencing boundary and would be placed five feet outside of the high-water mark to prevent the creation of barriers which could impede fish movement or access to habitat. Removal of vegetation adjacent to the banks of the waterways for the creation of the 30-foot wide corridor would slightly decrease the amount of cover and forage area available to local fish and may contribute to localized erosion and downstream siltation. However, a strip of natural riparian vegetation would be left intact directly along the banks of waterways to mitigate for potential loss of cover and forage area and to maintain riverbank stability.

The large gaps in the pipe-rail design along the Chena River would allow for fish passage during a flooding event. The open fence design would prevent the collection of large amounts of debris along the fence corridor.

Construction-related impacts would be minimized if activities on waterway occurred during winter. A Fish Habitat Permit from the Alaska Department of Natural Resources, Office of Habitat and Permitting, may be required for work in anadromous streams. The permit would be obtained prior to the initiation of the proposed action. Use of water bars or barriers during fence construction would control erosion of sediments into waterways.

3.7.4 Mitigation

Mitigation measures have been proposed as part of the proposed action. The following measures are applicable to Alternatives 2, 3, and 4.

- The proposed fencing would be placed five feet outside of the high-water mark to mitigate for potential flood hazards.
- A strip of natural riparian vegetation would be left intact along the banks of waterways (i.e., vegetation in the 30-foot wide construction and maintenance corridor would not be cleared to the edge of the waterway) to mitigate for potential loss of cover and forage area as well as for increased chances of erosion and downstream siltation.
- Any in-water construction in anadromous streams would occur during the time period between mid-May and mid-July to mitigate for potential disruptions during critical time periods in the life cycle of anadromous fish.
- Any crossing of anadromous waterways with construction equipment would be done when the waterway is frozen and may require a Fish Habitat Permit from the Alaska Department of Natural Resources, Office of Habitat Management and Permitting.

3.8 Wildlife

3.8.1 Affected Environment

The American peregrine falcon (*Falco peregrinus anatum*) and the Arctic peregrine falcon (*Falco peregrinus tundrius)* are federally delisted species found near Fairbanks area. There are three known American peregrine falcon nests in the vicinity of the Salcha River that lie east of the Yukon Training Area near Eielson AFB. The Arctic peregrine falcons migrate throughout the area, but would not be affected by the proposed project.

Many species of the boreal forest, including migratory birds, small mammals, moose (*Alces alces*), red fox (*Vulpes vulpes*), lynx (*Lynx canadensis*), coyotes (*Canis latrans*), beaver (*Castor canadensis*) and an occasional black bear (*Ursus americanis*) inhabit or use the areas of Fort Wainwright Main Post. A current list of species within the Fort Wainwright area can be found in Appendix F in the Integrated Natural Resource Management Plan 2002-2006 (USARAK 2002). Most of the lands north of the Chena River are relatively undeveloped and used as training areas. These are mostly second growth forest of birch/spruce, open black spruce wetlands, or burned woodlands, which provide the better habitat for most species. Several small ponds also exist.

The cantonment area lies south of the Chena River in an area that is developed into roads, airfields, offices, housing and training facilities. Ponds, gravel pits, urban landscapes, recreational fields, and overgrown fields. Small plots of second growth forest dot this area. Species adapted to urban landscapes use these areas, including some moose, small mammals and birds.

The Tanana Flats is an important moose calving area. A portion of the moose population that utilizes the Tanana Flats for calving and summer habitat migrates from the Chena Hills, which lie to the north of Fairbanks and the Main Post, to the Tanana Flats, which lie south of the Main Post. These moose return to the hills in the fall. In addition, because of increased urbanization in Fairbanks and North Pole, higher numbers of moose may use the Fort Wainwright small arms range and training areas north of the Richardson Highway. The frequency of moose-vehicle accidents along the Richardson Highway near Fort Wainwright are relatively high because the ranges and training areas provide habitat, and because of the high traffic volume along the highway.

3.8.2 Environmental Consequences of Alternative 1: No Action

Under this alternative, Fort Wainwright would not construct the proposed fencing project. Therefore, there would be no detrimental impact to wildlife and endangered species.

3.8.3 Environmental Consequences of Alternative 2: Main Post Fencing and Alternative 3: Main Post Fencing, Excluding Golf Course

No threatened or endangered species inhabit the Fort Wainwright Main Post. See Appendix B for formal coordination letter with the USFWS under Section 7 of the Endangered Species Act of 1973.

Some local wildlife populations could be impacted by the fence. However, with the proposed mitigation impacts would be minor and below the threshold of significance for wildlife described in Table 6. The chain-linked and high security fence along the Richardson Highway and Badger Road would impede movements of small mammals such as fox, lynx and coyotes; however, due to their smaller territorial requirements any population-level effect would be minor. There is potential for increased human-animal conflicts within the cantonment area, which could lead to removal or euthanasia of some animals.

The fence along these roadways could reduce the number of moose and bears that normally access the cantonment area. However, the cantonment area is urban and does not provide prime moose and bear habitat, nor is it desirable to have these large animals in this urbanized area due to increased human-animal conflicts.

Moose migrate seasonally between the Tanana Flats, located south of the Main Post, and the hills north of the Chena River. Fort Wainwright is situated in the approximate center of the migration corridor, which extends approximately from North Pole to the Fairbanks International Airport. Impedance of moose movements to and from the Tanana Flats, across the proposed fence area, could impact the portion of the moose population that winters in the Chena River Hills but migrates to the Tanana Flats during summer. Moose traveling south through the Main Post would be forced to either pass through road gates or walk around the western or eastern ends of the chain-link fence where they meet the Chena River in order to cross the Richardson Highway. Notwithstanding, given the adaptive nature of moose, it is not foreseen that the fence will prevent their seasonal migratory movements.

Construction of the pipe rail fence along the south side of the Chena River would ensure reduced impact to wildlife. The fence would not be high enough to alter movement of moose, and the possibility of trapping moose or other wildlife within the cantonment area would be minimal. Small mammals and birds should not be impacted. Clearings along the pipe rail will be maintained in a grass/low shrub state, providing browse/travel corridors for moose or other species. Impact to riparian vegetation would be minimized.

The length of pipe rail fence proposed along the Chena River in Alternative 3 is approximately 1.5 miles less than Alternative 2, due to the exclusion of the golf course at the eastern end of the bounded area. Thus, Alternative 3 has somewhat less of an impact to wildlife because animals could move more freely through the undeveloped areas south of the Chena River, and could continue to use the golf course as an unrestricted migration route.

Other important considerations with fence construction along the highways include human health and safety concerns and moose kills resulting from moose-vehicle collisions. The area near the interchange of Richardson Highway and Badger Road has relatively high rates of moose-vehicle collisions (Rozelle 1996, USARAK 2004). According to Alaska Department of Transportation statistics from the year 2000, moose were involved in 20 of 111 accidents involving property damage or injury on the 17.4 mile stretch from Fairbanks and Eielson Air Force Base (AKDOT 2002). Moose that attempt to cross the highway from south of the Richardson Highway could be delayed or prevented from crossing the fence, which would increase the possibility moose-vehicle collisions. To mitigate this impact, moose gates would be installed in the chain-link fence at intervals along the Richardson Highway to allow moose and other animals to safely exit the highway corridor. The locations of these gates will be coordinated with ADFG. Overall, with the proposed mitigation measures in place, installation of the fence will not reduce population levels of moose in the area or lead to the loss or impairment of moose habitat.

3.8.4 Environmental Consequences of Alternative 4: High Security Fencing

Development of a high security fence around the entire perimeter of the Fort Wainwright Main Post area south of the Chena River would result in moderate to severe impacts to localized populations of medium to large mammals. Most animals located within this area during the final phases of construction would be trapped, but for the presence of limited road gates along the fence route. With little or no emigration or immigration, animals would be subject to wide-scale population fluctuations, most likely related to food supply. Large animals such as moose or bear

could become a nuisance or hazard within the cantonment area, and some of these animals could need to be destroyed or removed from the area.

In addition, such a fence would result in a substantial impediment to migrating moose. Animals would be forced to search for alternate travel routes that circumvent the fenced area, thus increasing the risk of moose-vehicle collisions along the Richardson/Steese Highways or Badger Road. In addition to the safety risks, this could cause a localized impact to the population of moose that use the Chena Hills during winter and Tanana Flats during summer.

3.8.5 Mitigation

Mitigation measures have been proposed as part of the proposed action.

- Utilize a pipe rail fence design (bottom rail with 22-inch clearance and top rail with 40-inch height) along the Chena River to accommodate passage of small, medium, and large mammals under Alternatives 2 and 3.
- Install moose gates in the chain link fencing at appropriate places along highways to allow moose and other animals to exit the highway corridor safely under Alternatives 2 and 3.

3.9 Public Access and Recreation

3.9.1 Affected Environment

The U.S. Army in Alaska has a primary mission to maintain and enhance the combat readiness of its soldiers. However, within the military mission priority, USAG-AK recognizes the responsibility for allowing public access to military lands, providing both civilians and military personnel with recreational opportunities. USAG-AK complies with the Sikes Act (Title 16, Chapter 5C, Subchapter 1, Section 670a, as amended in November 1997), which requires that the USAG-AK Integrated Natural Resources Management Plan allow for public access to the military installation for appropriate and sustainable use of natural resources by the public to the extent that such use is consistent with the military mission and the needs of fish and wildlife resources. This access is still subject to requirements necessary to ensure safety and military security.

Training areas on Fort Wainwright may be individually closed to recreation during periods of active military use. This force protection policy is subject to change at any time, and under heightened security, access may be restricted.

There are no impact areas on the Main Post. However, access is restricted on the small arms range complex and in the southern part of the Main Post. This area also houses the firing points for the Alpha Impact Area on TFTA.

The open spaces remaining in the Fort Wainwright cantonment area are important contributors to the recreation opportunities for the post inhabitants. The core area of the cantonment consists of landscaped yards, office buildings, ball fields and open fields. Hunting and ORV use is not permitted on the cantonment area.

Surrounding the cantonment area, and across the Chena River, the post remains in a natural state. Recreation opportunities include hunting, fishing, ORV use, bird watching, dog walking, skiing, berry picking, and hiking.

USARTRAK Access Policy
Recreational users are required to obtain permission from Range Control for access to training areas. To obtain this permission users must register for a Recreation Access Permit (RAP). This permit is a waiver/permission slip to enter the Army training lands, which can be obtained at the front gate of the Main Post, the Conservation Officers at Fort Wainwright or Donnelly Training Area, or the Natural Resources Office. After receiving the RAP and before entering the Army lands, users must call the USARTRAK automated recreation phone system to check into the training lands. USARTRAK message systems are maintained by range control and have information on the latest training area closures.

This policy is in effect for all training lands associated with Fort Wainwright, including Yukon, Tanana Flats, Donnelly Training Area east and west, and Gerstle River Training Area. Recreational access is subject to force protection policy and can change at any time. The RAP and USARTRAK system alone are not sufficient for access to cantonment areas at Fort Wainwright Main Post or Donnelly Training Area, which require additional security measures. However even those who have access to the Main Post (military or civilian) at Fort Wainwright must still must obtain a RAP and use the USARTRAK system.

3.9.2 Environmental Consequences of Alternative 1: No Action
Under this alternative, Fort Wainwright would not construct the proposed installation fencing. Therefore, there would be no detrimental impacts to public access/recreation, but users would still be required to use the USARTRAK system to access the post.

3.9.3 Environmental Consequences of Alternative 2: Main Post Fencing
Hunting and off-road vehicle use are currently not allowed in the cantonment area, which accounts for the majority of the area to be fenced with the Main Post, therefore only minimal changes to outdoor recreation would occur.

Alternative 2 would have minor impacts to recreation in areas of the Main Post outside of the cantonment area. These impacts would be below the threshold of significance that is described in Table 6. The area north of the Chena River that is less developed than the main cantonment area would be unaffected by the proposed fencing. Additionally, the viewing platform along the bike trail would be impeded and a fence running in front or behind would impact the use of the platform. The platform may need to be moved. All other recreation programs would continue unimpeded.

The golf course would be included within the fenced-in area under Alternative 2. Recreation would continue to be managed inside the fence (softball, golf, bowling, use of Glass Park), while Birch Hill (skiing, skeet shooting) would also require access through the installation's gates. Gates would be installed to ensure pedestrian access at appropriate locations.

Fort Wainwright's access policy would remain as it is today. If force protection measures allow for access to the Main Post, then the training areas, if not being used for training, are available for recreation. All personnel, regardless if living on post or off, must obtain the Recreation Access Permit and then call the USARTRAK check-in system before entering the training areas.

3.9.4 Environmental Consequences of Alternative 3: Main Post Fencing, Excluding Golf Course
Recreational impacts would be similar to those under Alternative 2. However, Alternative 3 would have less impact to the golf course. Under Alternative 3, these areas would be outside the

fenced-in area. A gate would allow maintenance vehicles access from the main cantonment area to the golf course.

3.9.5 Environmental Consequences of Alternative 4: High Security Fencing
Access and fence location would be identical to Alternative 2.

3.9.6 Mitigation

- Under Alternative 2, a gate would be placed near the golf course to allow maintenance vehicles access to the fenced-in portion of Main Post.
- Maintain access to Fort Wainwright through use of USARTRAK. Recreational users must call-in to obtain information on range closures and document their intended recreational use.

3.10 Infrastructure

3.10.1 Affected Environment
Infrastructure includes compliance issues associated with real property easements including those associated with utilidors, phone/electric/pipe lines, railroads and other roads. Several utilidors, phone/electric/pipe lines are located within the cantonment area. The Alaska Railroad's main line passes through the central cantonment area, with spur tracks serving the central heating and power plant and warehouse circle. The main line also connects with the Fairbanks industrial spur.

The family housing areas on Fort Wainwright encompass six specific neighborhoods. Because of the age of most family housing units (built prior to 1960), Fort Wainwright has embarked on a revitalization and new construction program to upgrade and/or replace substandard facilities.

Community facilities within the region of influence include the Chena Bend Golf Course, Birch Hill Ski Area and Lodge, and forested areas for cross-country skiing. Fort Wainwright cantonment area also contains supply and storage facilities, training areas, and airfields.

3.10.2 Environmental Consequences of Alternative 1: No Action
Under this alternative, Fort Wainwright would not construct the proposed fencing project. Therefore, there would be no detrimental impacts to existing infrastructure.

3.10. Environmental Consequences of Alternative 2: Main Post Fencing, Alternative 3: Main Post Fencing, Excluding Golf Course, and Alternative 4: High Security Fencing
There would be no building demolitions associated with this project in any of the proposed alternatives. The project would encounter several utilidors, phone/electric/pipe lines and it will be necessary to obtain clearances from all utilities near the fencing project prior to construction. Impacts to these facilities would be minor and would be below the threshold of significance that is described in Table 6.

With each alternative, the fence would follow the Alaska Railroad right-of-way and would be located approximately 25 feet from the center-line of the right-of-way. The proposed fence would cross the railroad approximately 1,800 feet west of the intersection of South Gate Road and the Richardson Highway. However, the fence would not be constructed within the 50-foot Alaska Railroad right-of-way. Further negotiations regarding fence placement near the railroad would take place prior to fencing construction. Impacts to the Alaska Railroad are anticipated to be minor.

3.10.4 Mitigation

- Gates would be placed within the fence along the railroad to maintain the Alaska Railroad's access to their tracks.

3.11 Fire Management

3.11.1 Affected Environment

Fire management on Fort Wainwright is required by the Sikes Act and by Army Regulation 200-3. Fire management plans are required by the Resource Management Plan, which is mandated under Public Law 106-65, the Military Lands Withdrawal Act. The AFS, a BLM agency, has primary fire suppression responsibility for wildfires on the installation's outlying lands. The Fort Wainwright Fire Department has primary responsibility for fire suppression on Main Post. The cantonment area is categorized as critical for fire management. This area is given the highest priority for immediate response due to the urban and residential areas adjacent to it.

3.11.2 Environmental Consequences of Alternative 1: No Action

Under this alternative, Fort Wainwright would not construct the proposed perimeter security fencing. Therefore, there would be no changes in current fire management techniques.

3.11.3 Environmental Consequences of Alternative 2: Main Post Fencing, Alternative 3: Main Post Fencing Excluding Golf Course, and Alternative 4: High Security Fencing

The proposed alternatives are within a developed area and would pose little risk to wildfire incidents. It is always possible that wildland fire may spread from adjacent private lands onto Fort Wainwright and vise-versa. Minor impacts to fire management would be expected. These impacts would be below the threshold of significance that is described in Table 6. Additionally, Alaska Fire Service uses the Birch Hill area for smokejumper practice jumps. This area would still be accessible, and would not be included in the fenced-in area.

A cleared 30-foot maintenance corridor would be located on the inside of the fence. There is a concern that fire-prone weeds would become established in the cleared areas. The vegetation would be kept low to minimize the risk.

Access for AFS personnel would be provided through emergency gates which would be located at areas the AFS will likely use. Therefore, impacts to fire management would be minor.

The cantonment area would be completely enclosed so access to Birch Hill to pick-up smokejumpers would not be a concern. However, any fence line poses safety concerns when managing wildfire.

3.11.4 Mitigation

- The Alaska Fire Service would be given access onto military lands from multiple points along the boundary for initial attack and suppression of wildfires.
- Dimensions of gates would accommodate personnel as well as fire engines and larger equipment.
- Vegetation would be actively managed within 30 feet of the fence to reduce the potential spread of wildland fires and to provide access for AFS during potential wildland fires.
- A site visit would be coordinated with the Division of Forestry Area Forester and Alaska Fire Service after fence placement to determine buffer zone maintenance methods. The buffer zone would be maintained (grass beds treated annually) to prevent regeneration of flammable, prolific invasive species and reduce human safety risks from fire.

3.12 Cultural Resources

3.12.1 Affected Environment

Cultural resources include features and objects dating to the prehistoric and historic periods that are found or are likely to be found as defined by the National Historic Preservation Act (NHPA) of 1966 (as amended). Analysis of impacts to cultural resources relating to the NHPA and the Native American Graves Protection and Reparation Act (NAGPRA) is required as part of the EA process. Management of cultural resources on federal lands depends on eligibility of resources for inclusion in the National Register of Historic Places (NRHP).

Although a range of cultural resources occurs on Fort Wainwright Main Post, only two Districts and one Site have been determined eligible for management under NHPA. No Traditional Cultural Properties or Sacred Sites have been identified or reported on the Main Post.

Eight archaeological surveys have been conducted on Fort Wainwright Main Post. These surveys have either focused on high potential areas of Fort Wainwright, or related to construction projects. Survey sites include the southern slopes of Birch Hill, various barrow sources just south of the cantonment area, and the small arms ranges between the Richardson Highway and Tanana River.

Six archaeological sites have been found north of the Chena River and along the southern slopes of Birch Hill on Main Post. Only one site has been evaluated for eligibility for inclusion in the National Register of Historic Places, and it was determined to be ineligible. The remaining five sites have not been evaluated.

The entire Fort Wainwright Main Post has been inventoried and evaluated for eligibility for inclusion in the National Register of Historic Places within the World War II and Cold War historic contexts. In the World War II context, Ladd Field has been designated a National Historic Landmark. The Ladd Field National Historic Landmark includes 37 buildings and structures centered on the runways. In the Cold War context, the Main Post has been inventoried and evaluated with 70 buildings and structures centered on the runways contributing to the Ladd Air Force Base Historic District. This historic district was determined eligible for inclusion in the National Register of Historic Places but has not been formally nominated or listed.

The primary impacts to cultural resources under the proposed project could involve, but are not limited to, ground disturbance at identified archaeological sites, restricted access to known sacred sites, and/or visual impacts to historic properties or districts. Specifically, one historic property listed in the National Register of Historic Places is present on Fort Wainwright Main Post: the Ladd Field National Historic Landmark (NHL). There is also one historic property determined eligible for listing in the NRHP: the Ladd Air Force Base Historic District. No archaeological sites have been determined eligible for listing in the NRHP on Fort Wainwright Main Post, however there are a number of sites that have not been evaluated for eligibility.

Analysis of potential cultural resource impacts is based on the nature of proposed activities, and their potential to affect cultural resources. The following categories would be used in assessing potential impacts:

- No Historic Properties Affected – No historic properties affected implies there are no known or expected historic properties in the area of potential affect of the undertaking.

- No Historic Properties Adversely Affected – No historic properties adversely affected implies that there are known historic properties in the project's area of potential affect but that the proposed undertaking does not impact the qualities of the historic property that makes it eligible for listing in the National Register of Historic Places.
- Historic Properties Adversely Affected – Historic Properties Adversely Affected implies that there are known historic properties in the project's area of potential affect and the proposed undertaking would have an impact on the qualities of the property that makes it eligible for listing in the National Register of Historic Places.

3.12.2 Environmental Consequences of Alternative 1: No Action

Under this alternative, Fort Wainwright would not construct the proposed fence. Therefore, there would be no detrimental impacts to cultural resources. No Historic Properties would be affected under the No Action alternative.

3.12.3 Environmental Consequences of Alternative 2: Main Post Fencing, Alternative 3: Main Post Fencing, Excluding Golf Course, and Alternative 4: High Security Fencing

Both the Ladd Field National Historic Landmark and the Ladd Air Force Base Historic District are well separated from the proposed fence corridor. The proposed alternatives would have fencing placed along the south bank of the Chena River. No known archaeological sites are along this route. The North Post portions of the NHL and District are in the vicinity of the southern bank of the Chena River but would not be visually affected. No Historic Properties would be affected. Any impacts would be minor and below the threshold of significance described in Table 6.

3.12.4 Mitigation

- If cultural resources were located during construction, mitigation measures, including halting excavation or associated construction activity pending notification to the USARAK Cultural Resources Manager would be implemented.

3.13 Environmental Justice and Protection of Children

3.13.1 Affected Environment

In 1994, President Clinton issued Executive Order 12898, *Federal Actions to Address Environmental Justice in Minority Populations and Low-Income Populations*. This executive order directs each federal agency to identify and address any disproportionately high and adverse environmental effects of its programs, policies, and activities on minority and low-income populations. Environmental effects include impacts to human health and safety, minority and low-income communities, and socioeconomics.

The Presidential Memorandum accompanying Executive Order 12898, sent to heads of departments and agencies, specifically recognizes that environmental justice concerns should be identified and addressed under the procedures required by NEPA. In addition, the Department of Defense Strategy on Environmental Justice requires implementation of Executive Order 12898, principally through compliance with the provisions of NEPA.

In addition, Executive Order 13045, *Protection of Children from Environmental Health Risks and Safety Risks*, requires the identification and assessment of environmental health and safety risks that may disproportionately affect children.

Minority and Low-Income Communities

Statistics on ethnicity and poverty levels from the 2000 U.S. Census were compiled from the Alaska Department of Community and Economic Development. Minority populations are identified using U.S. Census Bureau data to delineate areas where the percentage of minority individuals exceeds the state average by five percent. Low-income communities are identified using the 2001 U.S. Department of Health and Human Services Poverty Guidelines for the state of Alaska. Communities where the percentage of households with incomes below the poverty level exceeded the percentage of low-income households statewide by five percent are defined as low-income communities.

Since the percentage of persons in Alaska identified as minority under U.S. Census guidelines is 30.7%, any community with a minority population of 35.7% or above is considered a minority community for purposes of this analysis. The same method is used to define low-income communities: 11.2% of Alaskans are considered low-income, so any community where the percentage of persons living below the poverty level is 16.2% or higher is a low-income community for the purposes of this environmental justice analysis.

Environmental justice analysis seeks to ensure that minority and low-income communities do not bear a disproportionate share of negative environmental consequences resulting from federal agency activities.

Protection of Children
Human health and safety includes the facets of military activities and materiel that potentially pose a risk to the health, safety and well being of military personnel or civilians. Risks include hazardous materials and wastes, in addition to unexploded ordnance and other occupational safety hazards posed by activities on USAG-AK lands.

3.13.2.1 Environmental Consequences of Alternative 1: No Action Under this alternative, USAG-AK would continue its current training uses of Fort Wainwright without any disproportionate adverse effects on surrounding minority or low-income communities or to children.

3.13.2.2 Environmental Consequences of Alternative 2: Main Post Fencing, Alternative 3: Main Post Fencing, Excluding Golf Course, and Alternative 4: High Security Fencing
Based on the 2000 U.S. Census data, the Fairbanks North Star Borough had a population of 82,840. Of that total, 18,401 persons (22.2%) were minority and 6,206 (7.5%) persons were low income. Based on the criteria described in Section 3.13.1, Minto and Nenana are minority and low-income communities in the broader surrounding area. Due to their distance from Fort Wainwright Main Post, these communities would not experience any disproportionate impacts, whether from contamination, safety, noise, traffic, wildlife, vegetation, or recreational access, from the proposed action.

According to the Task Force on Environmental Health Risks and Safety Risks to Children, four priority areas of concern regarding children's health and safety are: childhood asthma, unintentional injuries, developmental disorders, and childhood cancer. With these priorities in mind, potential effects on children from fence construction activities would be beneficial, instead of detrimental. Access would be more restricted; therefore, unintentional injuries caused from children accessing training lands during training activities would be reduced. Additionally, the decreased access would reduce the potential for exposure to known contaminated sites, thus reducing the risk of developmental disorders or childhood cancer.

The proposed action would not have significant or disproportionate adverse effects on children or pose health or safety risks. Any impacts would be below thresholds described in Table 6. Installing fencing with appropriate signage should have a positive impact on environmental health and safety for children by reducing intentional and inadvertent access to the military reservation.

3.14 Socioeconomics

3.14.1 Affected Environment

The Fairbanks North Star Borough is Alaska's second largest population area. There were 82,840 people in the borough as of December 2001, according to the Alaska Division of Community and Economic Development. The Fairbanks North Star Borough includes the organized municipalities of Fairbanks and North Pole within its boundaries.

As with other metropolitan areas of the state, Fairbanks has a somewhat higher proportion of white individuals and lower percentage of Native individuals when compared to the statewide average. The age distribution of Fairbanks' population reflects a higher than national average proportion of younger-aged individuals. In addition, there are significantly more males than females in Fairbanks. This is in part due to the relatively greater size of the military in proportion to the population of Fairbanks.

Table 8 shows that the per-capita income in Fairbanks is slightly below the national average. It is significantly lower than Anchorage but above that for rural areas is Alaska. The poverty rate is below the national average. Fairbanks has enjoyed steady, consistent growth since the statewide recession of the mid-1980s. However, the spectacular incomes generated during the pipeline/oil boom are past.

Table 8. Fairbanks Region Income and Poverty Statistics for 2000.

Economic Factor	Value
Per Capita Income	$21,553
Median Household Income	$49,076
Median Family Income	$56,478
Persons in Poverty	6,206
Percent of Population Below Poverty Level	7.80%

Source: Alaska State Department of Community and Economic Development 2002.

Average monthly employment and earnings in the Fairbanks North Star Borough indicate that influence of public expenditures is remarkably high. It is important to recognize that uniformed military is not tracked regularly in labor publications because it does not participate in the unemployment compensation program. Data provided by the Department of Labor in Table 9 does not include uniformed military in totals for the government and all industries categories. Uniformed military has been added at the bottom of the table for comparison.
Economic activity attributable to Fort Wainwright is presented in Table 10.

Table 9. Fairbanks Region Average Monthly Employment and Earnings Statistics for Year 2000.

Industrial Classification	Average Monthly Employment	Average Monthly Earnings ($)
Total		
All Industries	33,475	$2,706
Private Ownership	22,787	$2,534

Table 9. Fairbanks Region Average Monthly Employment and Earnings Statistics for Year 2000.

Industrial Classification	Average Monthly Employment	Average Monthly Earnings ($)
Government	10,689	$3,074
By Industry		
Agriculture, Forestry and Fishing	133	$1,583
Mining	926	$5,823
Construction	1,750	$3,739
Manufacturing	598	$3,180
Transportation, Communications, and Utilities	3,132	$3,457
Total Trade	6,768	$2,829
Finance, Insurance, and Real Estate	1,122	$2,829
Services	8,356	$2,172
Federal Government	3,376	$3,444
State Government	4,534	$2,860
Local Government	2,779	$2,974
Uniformed Military	6,926	$3,262

Source: Alaska Department of Labor and Workforce Development 2001; USARAK Public Affairs Office 1995-2002.

Table 10. Socioeconomic Impacts of Fort Wainwright for Year 2000.

Socioeconomic Category	Value or Number
Uniformed Personnel	4,047
Non-Uniformed Personnel	1,753
Annual Total Payroll	$204,760,000
Non-Personnel Expenditure	$137,700,000
Total Annual Employment Impact Including Multiplier	14,354
Total Annual Dollar Impact Including Multiplier	$678,100,000

Source: U.S. Army Alaska FY 2002 Demographics, provided by USARAK Public Affairs Office 1995-2002.

3.14.2 Environmental Consequences of Alternative 1, No Action (Existing Fence)

USAG-AK's activities on Fort Wainwright would continue to contribute positive economic impacts to the Fairbanks area under the No Action Alternative. Training and deployment activity would be expected to continue.

3.14.3 Environmental Consequences of Alternative 2: Main Post Fencing, Alternative 3: Main Post Fencing, Excluding Golf Course, and Alternative 4: High Security Fencing

Overall, the military would continue to provide beneficial economic activity in the Fairbanks area. The proposed action would generate about $18 million for design and construction of the fence. Most of this money would be spent in the Fairbanks North Star Borough. Fencing construction could temporarily increase population and employment levels.

3.15 Aesthetics

3.15.1 Affected Environment

The potential impact to the aesthetics of an area is also a necessary consideration in determining the potential impact of a proposed federal project. An important element in the quality of life of Fairbanks residents is the enjoyment derived from residing in close proximity of an exceptional natural environment.

The proposed action will serve to alter the view of adjacent private property owners. The degree of impact will depend upon the type and proximity of the fence to the adjacent private property. Other factors affecting overall impact include existing privacy fences and structures on or near private property. The existing environmental setting within the cantonment area is comparable to the well-developed sections of neighboring Fairbanks.

3.15.2 Environmental Consequences of the Alternative 1: No Action (Existing Fence)

The No Action Alternative would maintain the status quo.

3.15.3 Environmental Consequences of Alternative 2: Main Post Fencing, Alternative 3: Main Post Fencing, Excluding Golf Course

Alternatives 2 and 3 have the potential to diminish the aesthetics of the Fort Wainwright cantonment area. Aesthetics would be most impacted in areas where currently no fencing exists along the post boundary. Much of the portion of the fence along the east and south borders of the cantonment area will have fence where none existed before. Portions of the fence along the Badger Road will be next to private property and residences. The particular fence design also affects adjacent property owner's aesthetic impacts of the proposed fencing. However, the fact that security fencing would reduce unauthorized access onto Army land could also benefit homeowners who may have experienced noise and other disturbance due to unauthorized users being present on adjacent Army land. The section along the Steese Expressway already has 5-foot chain link fence, and the new fence along this portion of the highway will be more visible because of the added height and security wire.

Most likely, the greatest aesthetic impact of the fence would occur along the south bank of the Chena River, where pipe rail fencing would be established. The proposed pipe rail fencing would be 40 inches high, with a lower pipe 22 inches above the ground surface. Compared to other types of proposed fencing, pipe rail provides the least aesthetic impact. The river is used for recreation by boaters and those using snow machines, and there is a bike/pedestrian path about 20 yards south of the riverbank. Thus, the fence will be visible to recreational users. This portion of the fence will not affect private property owners.

Effects to existing aesthetics would be minor for most areas, and the impacts would be below thresholds described in Table 6.

3.15. 4 Environmental Consequences of Alternative 4: High Security Fencing

Alternative 4 represents the greatest potential for negative visual impact. The fence design under this alternative includes the construction of an eight-foot-high combined high security fence within one foot of the property line along the entire boundary topped with three strands of barbed wire. This design would impede the view within and outside to the cantonment area, and result in a moderate negative impact to aesthetics.

3.16 Cumulative Impacts from the Proposed Action and Alternatives

The following is a list of cumulative environmental impacts, defined under CEQ Regulation 40 CFR 1508.7 and Army Regulation 32 CFR part 651, related to all alternatives. Cumulative impacts result from the incremental impact of the action when added to other past, present, and reasonably foreseeable future actions. Cumulative effects can also result from individually minor but collectively significant actions taking place locally or regionally over a period of time. Subjects that are not specifically referenced in this section have either no cumulative impacts or relatively minor environmental impacts, and have therefore been eliminated from discussion.

3.16.1 Present and Future Actions

There are numerous projects planned for Fort Wainwright that may result in cumulative impacts. While these projects are independent of the proposed action described in this document, it is nevertheless appropriate to consider impacts associated with the proposed action and other alternatives in light of these independent projects.

Capital Improvement Projects

Fort Wainwright is undertaking or planning a variety of small capital improvement projects that will be situated within the installation's cantonment area. These include the removal of existing structures that are no longer serviceable, and the construction of new structures such as soldiers' barracks, and training and support facilities. These new facilities either have been located or will be located within sections of Fort Wainwright that has undergone substantial development over the past 50 years. The existing environmental setting within the cantonment area is comparable to the well-developed sections of neighboring Fairbanks.

USARAK Force Transformation

Planned to begin summer 2004, the 172nd Infantry Brigade at Forts Richardson and Wainwright will transform into a Stryker Brigade Combat Team. As proposed, transformation of USARAK forces represents substantial changes in the way Army Alaska will operate. Foremost is the stationing of several hundred new armored combat and support vehicles, plus the addition of new personnel. The potential environmental impact to all USARAK installations and training lands as a consequence of these changes is set forth in a Transformation of U.S. Army Alaska Final Environmental Impact Statement [69 Fed. Reg. 21501, Apr. 21, 2004].

3.16.2 Air Quality

All current and planned projects have the potential to impact local air quality. These impacts consist of dust generated from ground and vegetation disturbance during the construction phase of the various projects; increased use of unimproved roads for initial Stryker training; use of motorized construction equipment; and increased exhaust emissions from natural-gas fueled heating systems within the new structures. Mitigating efforts and best management practices would serve to make dust a temporary and insignificant concern. Emissions generated by construction equipment would also be temporary and insignificant. Overall cumulative impact to local air quality will be minor.

3.16.3 Vegetation

The fencing project in conjunction with capital improvements planned or recently implemented within the current Fort Wainwright boundaries would result in a cumulative loss of approximately 280 acres of undeveloped land within the approximate 13,700 acres of Fort Wainwright's Main Post. Use of armored vehicles and additional training associated with transformation is expected to have a minor impact to vegetation. Fort Wainwright's adaptive natural resource management techniques and individual project restoration plans serve to monitor and mitigate loss of

vegetation and allow for necessary changes to training activities to prevent significant habitat loss. Overall cumulative impact from these projects will be minor.

3.16.4 Fisheries and Wetlands

The fencing project could result in a slight impact to fisheries along the Chena River during severe flooding events because the fence will be along the floodplain. Because of mitigations, the fencing project would also result in minimal loss of undisturbed riparian vegetation along the banks of the Chena River. Any impact to other streams would be negligible. While construction of the fencing project, capital improvements, and increased training activities have the potential to increase erosion and siltation of streams, best management practices would ensure these projects result in minimal impact to water bodies within Fort Wainwright. About 135 acres of wetlands have been impacted by recent construction projects, particularly housing projects, and the cumulative impact would be about 170 acres of wetland impact on the Main Post. Although wetlands will be disturbed during construction, all work will be performed in accordance with a permit issued by the US Army Corps of Engineers where necessary. The wetlands permit requirements limit disturbance of wetlands and protect the integrity of wetland hydrology. Overall cumulative impact will be minor.

3.16.5 Wildlife

There would be a cumulative loss of wildlife habitat within the cantonment area. The reduction of these resources includes birch, spruce, and poplar forest ecosystems along with open wetland meadows and other ecotypes listed within the natural resources management plan. About 280 acres of potential habitat–mostly grassland, early succession, second growth forest, or disturbed sites–on the cantonment area have been recently altered or removed due to construction. The cantonment area is generally urbanized and consists of roads, housing, offices, barracks, hangars, and airfields. Areas not designated as training areas are considered in the cantonment area, and this is where most new construction of infrastructure takes place. Primarily species adapted to urban environments inhabit the cantonment area at Fort Wainwright. A chain link fence around the perimeter of the cantonment area would impede movement of large and medium mammals. However, installing a pipe-rail fence along the Chena River, and implementation of wildlife gates along the Richardson Highway will ensure that most migrating or dispersing animals would not be significantly affected by the fence. Overall the cumulative impact of the fence to wildlife would be minor.

3.16.6 Public Access and Recreation

The proposed fencing project would have a very minor impact to recreational use of Fort Wainwright. Procedures for granting authorized recreational access would remain unchanged. Transformation of USARAK forces will result in increased training activities and will result in more frequent closure of undeveloped areas on the installation, but overall impact is expected to be minor. The cumulative impact of these actions will be minor.

3.16.7 Cultural Resources

Proposed and alternative actions do not occur in the vicinity of known or suspected cultural resources. There are no cumulative affects on cultural resources from these actions.

4.0 LIST OF PREPARERS AND CONTRIBUTORS

The following individuals were primarily responsible for the content of this EA. The United States Army Garrison, Alaska, Directorate of Public Works, Environmental Resources Department, and Environmental Planning Division prepared this EA.

Barta, Carrie, NEPA Specialist, USAG-AK
B.S. Watershed Science
Years Experience 6

Brashear, Amanda, Research Associate, CEMML
B.S. Natural Resources
Years Experience: 4

Breindel, Debra, Chief, USACHPPM Field Office Alaska
M.S. Environmental Management
B.S. Business Management
Years Experience: 10

Gardner, Kevin, Environmental Project Manager, USAG-AK
M.S. Science Management
B.S. Engineering
Years Experience: 24

Hunter, Andrea, Former Fort Wainwright NEPA Coordinator, USAG-AK CEMML
M.W.R. Masters of Water Resources/Subterranean Microbiology
B.S. Environmental Science/Biology
Years Experience: 2

Rees, Dan, Forester, USAG-AK, CEMML
M.S. Forestry
B.S. Biology
Years Experience: 6

Reidsma, Steve, Natural Resources Specialist, USAG-AK CEMML
B.S. Biology
Years Experience: 9

Sackett, Russell, Cultural Resources Manager, USAG-AK, CEMML
M.A. Architecture
Years Experience: 28

Sayre, Roger, Fort Wainwright NEPA Coordinator USAG-AK CEMML
Ph.D. Biology
M.S. Range Science
B.A. Anthropology
Years Experience: 15

Siftar, Kate, Chief of Environmental Compliance, USAG-AK
B.S. Geology

Years Experience: 21

Skaugstad, Gale, Former Public Outreach Coordinator/NEPA Specialist, USAG-AK, CEMML
B.A. Psychology
Years Experience: 4

Woods, Aaron, GIS Specialist, USAG-AK, CEMML
B.S. Public Administration
Years Experience: 4

Wuorinen, Susie, Environmental Law Attorney, USARAK
J.D. Law
B.S. Administrative Science
Years Experience: 14

5.0. REFERENCES

AHRG, 1986. Sixth Infantry Division (Light) Historic Preservation Plan for U. S. Army Lands in Alaska. Alaska Heritage Research Group, Inc., for The Alaska District Corps of Engineers.

Alaska State DOTPF, 1992. Location and Environmental Assessment Richardson and Old Richardson Highway Interchange I-0A2-4(14). State of Alaska, Department of Transportation and Public Facilities, Northern Region.

Alaska Department of Transportation (AKDOT), 2002. Alaska Traffic Accidents, 2000. Division of Statewide Planning: Juneau, Alaska.

Department of the Army, USAG-AK, 2002. Army Regulation 200-2, Environmental Analysis of Army Actions; Final Rule, dated 29 March, 2002, Headquarters, Department of the Army (32 CFR Part 651).

Dixon, E. J. Jr., Smith, G. S. and Plaskett, D.C., 1980. Archeological Survey and Inventory of Cultural Resources at Fort Wainwright, Alaska. June 1980, (DACA85-78-C-0047).

DPW Environmental Office, 1994. The administrative record for Fort Wainwright Alaska prepared by the U.S. Army, Alaska, dated 1 January 1994 and updated quarterly. On file at the Department of Public Works Environmental Office, Fort Wainwright and at the Noel Wein Library in Fairbanks, Alaska.

Executive Order 12898, 1994. "Federal Actions to Address Environmental Justice in Minority and Low-income Populations dated 11 February 1994."

Executive Order 13045, 1997. "Protection of Children from Environmental Health Risks and Safety Risks."

Higginbotham/Briggs & Associates, 1991. Installation design guide, 6th infantry division (light). U.S. Army Garrison Alaska under the direction of Department of the Army, Alaska District, Corps of Engineers, Anchorage, Alaska, October, 1991.

Pratt, J., Preston, E., Strickler, R., 1977. Working draft environmental impact statement for installation utilization at Fort Wainwright for the Alaska District Corps of Engineers, October 1977.

Rahn, 1982. On the causes, characteristics and potential environmental effects of aerosols in the arctic atmosphere. Arctic Ocean: The hydrographic environment and the fate of pollutants. New York: John Wiley and Sons, pp. 163-195.

Rozelle, N. 1996. Moose in Winter: Alaska's Half-Ton Road Hazard. Article #1313, Alaska Science Forum, November 27, 1996. http://www.gi.alaska.edu/ScienceForum/ASF13/1313.html

Tolliver, W. 1999. Lead-Based Paint/ Asbestos Management Plan, March 1999. Fort Wainwright,

USAG-AK 1994. The administrative record for Fort Wainwright. U.S. Army Garrison Alaska. Dated January 1994, updated quarterly. Found at DPW Environmental Office, FWA and at the Noel Wein Library in Fairbanks, Alaska.

USAG-AK 1995. United States Army Alaska Regulation 200-4. Hazardous Waste, Used Oil and Hazardous Materials Management. August 1, 1995.

USAG-AK 1999. Integrated Natural Resources Management Plan 1998-2002. U.S. Army Garrison Alaska, Volume 3 - Fort Wainwright.

USAG-AK 2000. Environmental Protection and Enhancement-Army Regulation 200-1. May 2000.

USAG-AK 2002. Environmental Assessment for the Construction of the Alert Holding Area/Pallet Processing Facility. U.S. Army Garrison Alaska. August, 2002.

USAG-AK 2002. Integrated Natural Resources Management Plan 2002-2006. U.S. Army Garrison Alaska, Volume 3 – Fort Wainwright.

USARAK 2004. Transformation of U.S. Army Alaska. Final Environmental Impact Statement. U.S. Army Alaska. Department of the Army. Fort Richardson, Alaska.

6.0 AGENCIES AND INDIVIDUALS CONTACTED

Alaska Army National Guard

Alaska Department of Environmental Conservation

Alaska Department of Fish and Game

Alaska Department of Natural Resources, Office of Habitat Management

Alaska Department of Natural Resources, Office of History and Archaeology
Judith Bittner, State Historic Preservation Officer, Anchorage, AK

Alaska Department of Natural Resources, Division of Forestry

Alaska Department of Transportation, Central Region Office

Alaska Railroad

Fairbanks Chamber of Commerce

Fairbanks North Star Borough

Federal Emergency Management Agency
Bothell, WA

USACHPPM
Kearns, Amy – USACHPPM Anchorage
Marsh, Melody – USACHPPM Anchorage

U.S. Army Corps of Engineers
Dalfoist, Chris
Doherty, Michael
Jordan, John
Newman, Sheila

U.S. Army Garrison Alaska, Directorate of Public Works
Adams, Brian
Andrews, Jeff
Garner, Chris
Geist, Marcus
Hollinger, Kristy
Johnson, Doug
Larsen, Gary
Prieksat, Mark
Quirk, Bill
Ruskowski, Tom

U.S. Army Garrison Alaska, Provost Marshal Office
Carlson, Dan
Gilson, Eric
Reeves, Robert