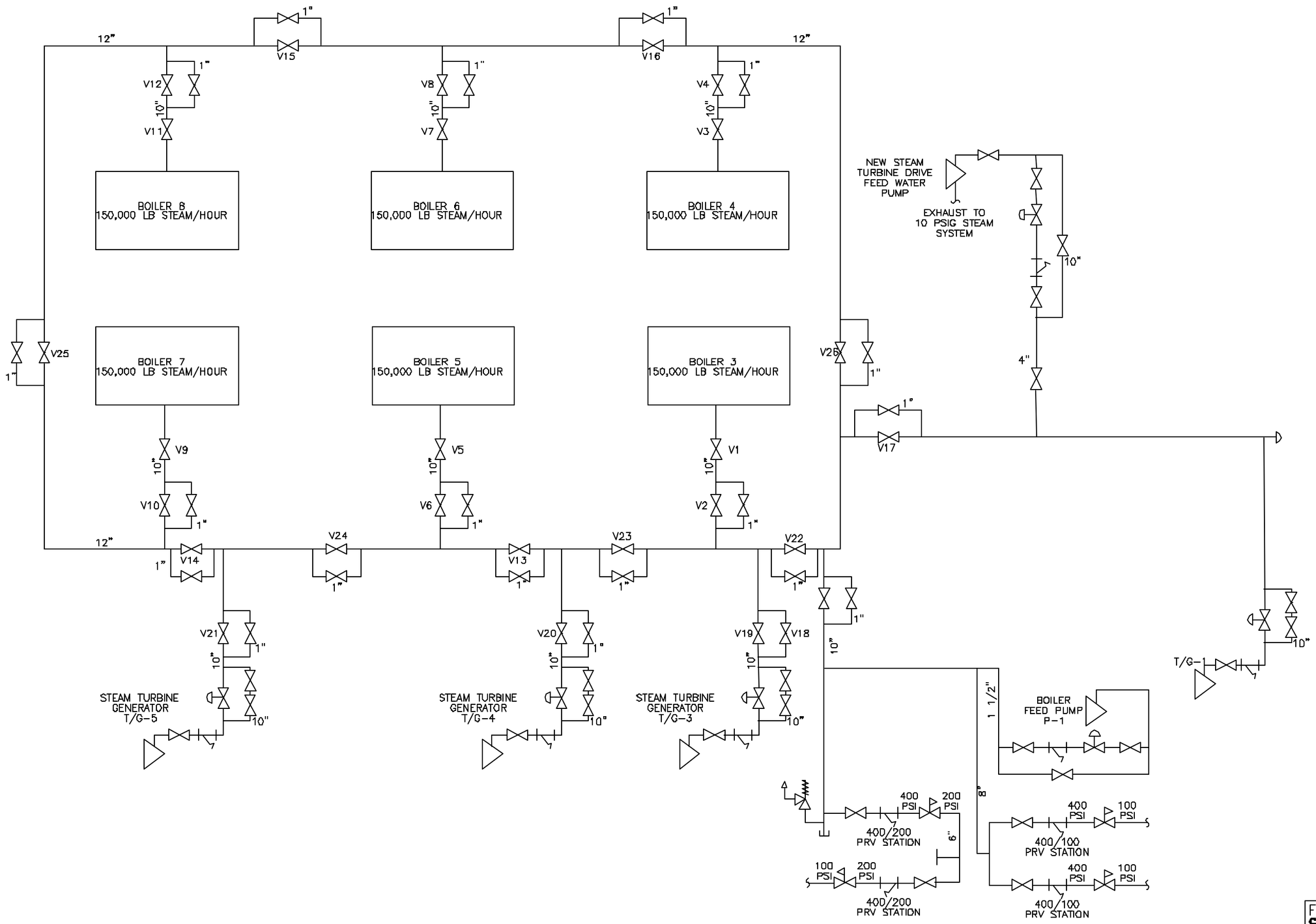

FIGURE 5.
C.H. GUERNSEY & COMPANY
OKLAHOMA CITY, OK
400 PSIG STEAM SYSTEM
FLOW SCHEMATIC
FORT WAINWRIGHT, ALASKA