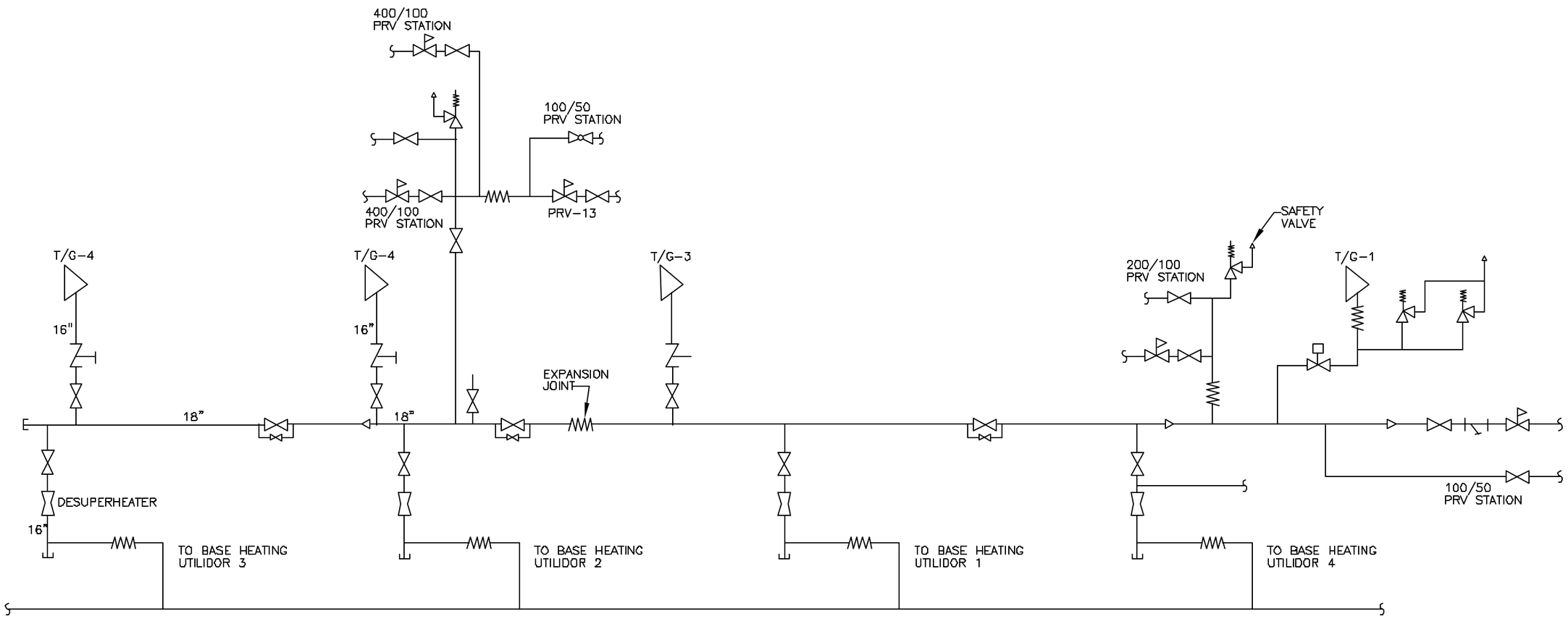

FIGURE 6.
C.H. GUERNSEY & COMPANY
OKLAHOMA CITY, OK
100 PSIG STEAM SYSTEM
FLOW SCHEMATIC
FORT WAINWRIGHT, ALASKA