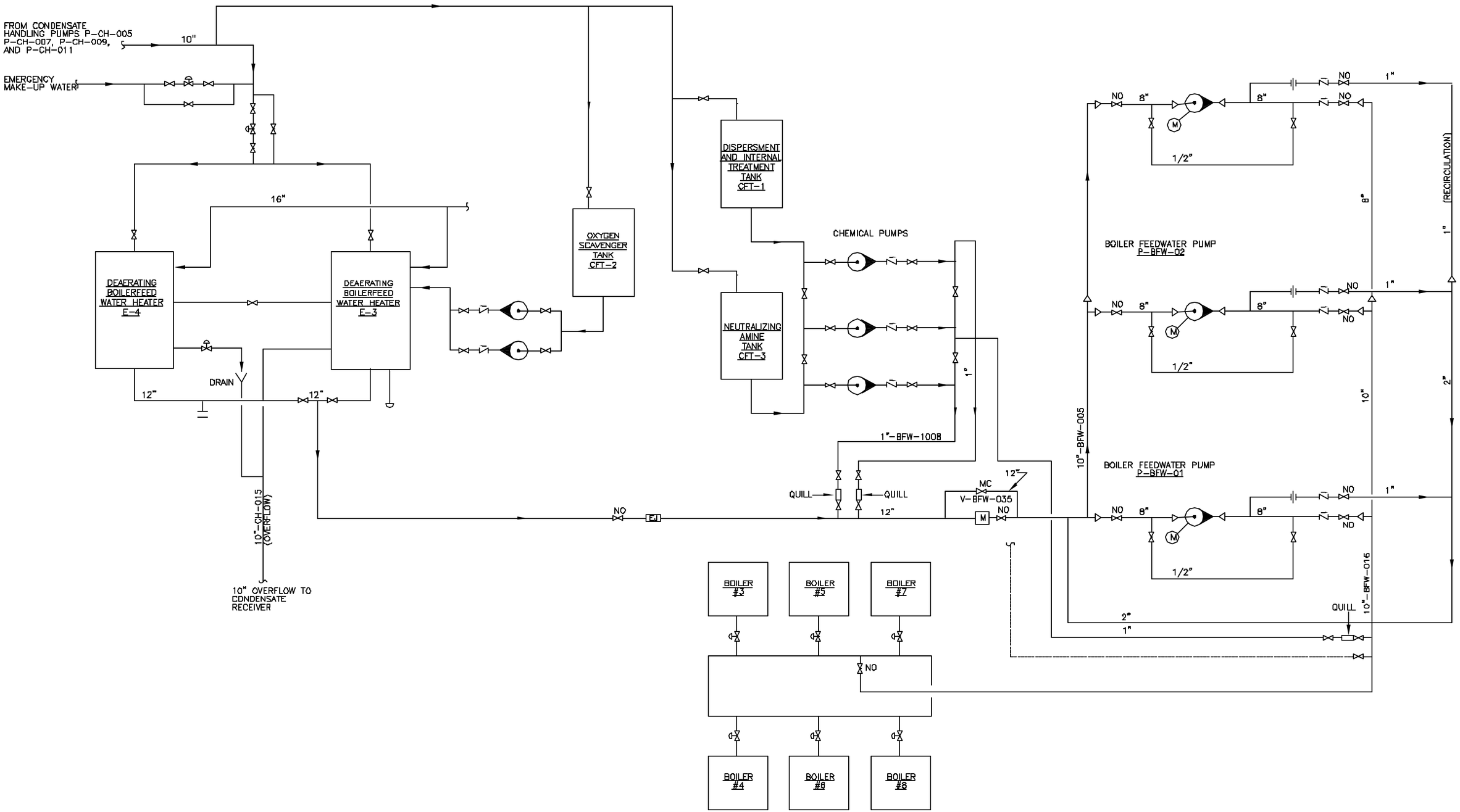

FIGURE 4.
C.H. GUERNSEY & COMPANY
OKLAHOMA CITY, OK
BOILER FEEDWATER CONTROL DIAGRAM
FORT WAINWRIGHT, ALASKA