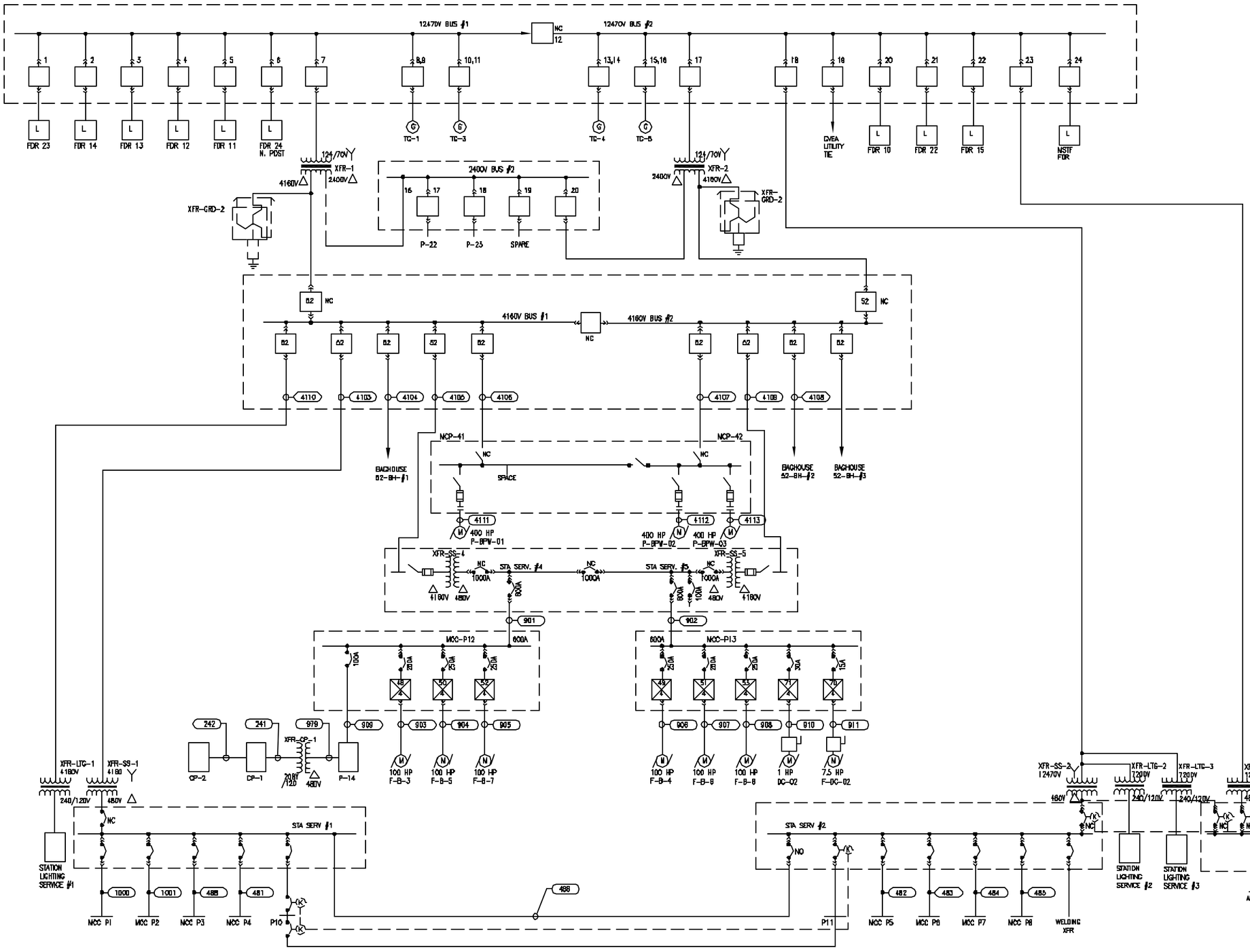

FIGURE 10.
C.H. GUERNSEY & COMPANY
OKLAHOMA CITY, OK
ELECTRICAL
SINGLE LINE DIAGRAM
FORT WAINWRIGHT, ALASKA